THE CITY OF ASHLAND CONDUCTS THEIR MEETINGS IN PERSON at CITY HALL COUNCIL CHAMBERS, 601 MAIN STREET WEST, ASHLAND, WI WITH THE AVAILABLITY TO ATTEND VIRTUALLY

Please contact the Clerk's office if you require accommodations to attend the meeting.

To join the meeting from your computer, tablet or smartphone:

https://global.gotomeeting.com/join/500263957

Or dial in using your phone.

United States (Toll Free): 1-877-309-2073

Access Code: 500-263-957

ASHLAND COMMITTEE OF THE WHOLE MEETING
Tuesday, October 11, 2022 – 6:00 PM

THE COMMITTEE OF THE WHOLE BEGINS IMMEDIATELY AFTER THE CITY COUNCIL MEETING HAS ADJOURNED, WHICH BEGINS AT 6:00 PM.

Please silence all cell phones during the meeting

1. Roll Call
2. Approval of Agenda
3. Council President's Report
4. Administrator's Report
5. Committee Updates
6. Discussion Items
   A. **Discussion and Possible Action Regarding Budget Proposals and ARPA Funds** *(Council)*
   B. **Discussion Regarding Wisconsin Department of Transportation Preliminary Design for Ellis Avenue/State Highway 13 Reconstruction Project** *(Public Works)*
   C. **Discussion and Possible Action Regarding Snow Removal around Fire Hydrants** *(Councilor Seefeldt)*
   D. **Discussion and Possible Action Regarding Long Term Projection of Water & Wastewater Utility Rates** *(Public Works)*
7. Items for Future Discussion
8. Adjournment

The City of Ashland does not discriminate on the basis of sex, race, creed, color, national origin, sexual orientation, age or disability in employment or provision of services, programs or activities.

NOTE: Upon reasonable notice, the City of Ashland will accommodate the needs of disabled individuals or individuals with limited English proficiency through auxiliary aids or services. For additional information or to request this service, contact Denise Oliphant at 715-682-7071 (not a TDD telephone number) or FAX: 715-682-7048

Ref: 2022-999

COMMITTEE AGENDA: 5.
(10/11/2022)

SUBJECT: Committee Updates

RECOMMENDATION: Discussion Only

DEPARTMENT OF ORIGIN: Council President

CLEARANCES: Council President

EXHIBITS:

SUMMARY STATEMENT:

ASHLAND ORE DOCK CHARITABLE TRUST - Ana Tochterman
DISABLED PARKING ENFORCEMENT ASSISTANCE - Laura Graf
HARBOR COMMISSION - Dick Pufall
HISTORIC PRESREVATION COMMITTEE - Eric Lindell
HOUSING AUTHORITY - Kevin Seefeldt
HOUSING COMMITTEE - Charlie Ortman
LIBRARY BOARD - Sarah Jackson
PARKS & RECREATION BOARD - Kevin Seefledt
PLAN COMMISSION - Ana Tochterman
PUBLIC WORKS COMMITTEE - Eric Lindell
SUSTAINABILITY COMMITTEE - Laura Graf

Ref: 2022-181

COMMITTEE AGENDA: 6.A.
(10/11/2022)

SUBJECT: Discussion and Possible Action Regarding Budget Proposals and ARPA Funds *(Council)*

RECOMMENDATION: Discussion and Possible Action

DEPARTMENT OF ORIGIN: Council Member

CLEARANCES: Council President

EXHIBITS:

1.	Dedicated Expenditures of ARPA Funds
2.	2023 Project and Capital Budget

SUMMARY STATEMENT:

Council requested an opportunity to offer suggestions as to the spending of the American Rescue Plan Act funds and other budget proposals, prior to finalizing the 2023 Budget.

Date	Jrnl	Reference Number	Payee or Description		TOTAL ARPA Funding	Property 415 Lk Sh Drive W	Downtown Façade Grants	Sm Bus Assistance	Kreher Pk Cmpgrnd	Undedicated Funds
6/24/2021	**CR**	30000688	WISCONSIN DEPT OF REVENUE	ARPA LOCAL RECOVERY FUNDS	410,457.74					
6/17/2022	**CR**		WISCONSIN DEPT OF REVENUE	ARPA LOCAL RECOVERY FUNDS	410,457.74					
				TOTAL ARPA LOCAL RECOVERY FUNDS	**820,915.48**	**150,000.00**	**100,000.00**	**100,000.00**	**200,000.00**	**270,915.48**
2022 EST	PR		PERSONNEL COSTS 2022	Wages and benefits estimated for the year	(68,500.00)					(68,500.00)
8/1/2022	AP	5	ASHLAND COUNTY TREASURER	Barron Prop 2nd Installment Real Estate Property Taxes Parcel 201-04299-0	(368.29)					(368.29)
9/14/2022	AP	51	CHOICE TITLE	Barron Prop Closing costs per contract for parcel #201-04299-0000 || 501 3	(1,364.00)					(1,364.00)
9/14/2022	AP	52	CHOICE TITLE	Barron Prop PURCHASE OF PARCEL #201-04299-0000 || 501 3RD ST W (BAI	(44,035.00)					(44,035.00)
7/29/2022	AP	244	EVERGROW LEARNING CENTER	**Inv. No: 72922 **Desc: ARPA funding-childcare facility-Council approved	(40,000.00)			(40,000.00)		-
6/30/2022	JE	11	EAST END PARK IMPROVEM FUND 48	Council approved $10,000 arpa for project 6/28/2022	(10,000.00)					(10,000.00)
				Downtown lighting project - estiamte	(20,550.00)		(20,550.00)			-
				CDI development grant match	(50,000.00)			(50,000.00)		-
				2023 Downtown Manager Personnel Costs	(73,500.00)	-	-	-	-	(73,500.00)
				Estimated Balance 12/31/2022	**512,598.19**	**150,000.00**	**79,450.00**	**10,000.00**	**200,000.00**	**73,148.19**

2023 PROJECT AND CAPITAL BUDGET

Presented October 11, 2022

- A Capital Budget is a multi-year planning document used by the City to identify capital improvement projects and coordinate the financing and timing of the projects
- The Capital Budget is a 5-year plan that identifies projects, priorities, and financing
- Funds are appropriated on an annual basis that coincides with the City's budgeting process
- Funded through a variety of sources including General Fund levy, grants, special revenues and special assessments
- The Capital Budget does not currently include utility capital budgets which should be integrated in the future

WHAT IS THE CAPITAL BUDGET?

CAPITAL FUNDS	
TID #10 Project Fund	Police Equipment
Public Transportation	Computer Equipment
Buildings and Facilities	Street Improvements
Waterfront Development	Urban Forestry
Equipment Leases	Parks and Grounds
Public Works Equipment	Landfill
Fire Equipment	Community Development

CAPITAL FUNDS

- Various projects per the project plan - $15,150
- Downtown improvement grant - $17,100
- Interest on Advance from fund 250 - $10,730

TID #10 PROJECT FUND

- Future transportation projects – potential transportation center
- $22,000 projected beginning and ending fund balance, funds are restricted for transportation center project

PUBLIC TRANSPORTATION

- Building and Facilities Master Plan Phase II - $75,000

BUILDINGS AND FACILITIES

- *All transfers to other funds, revenue comes from annual room taxes

- Oredock Upland Master Plan - $75,000
- GF Parks Maintenance Reimbursement - $20,000
- ARTS repairs - $58,380
- Kreher Park Campground - $100,000

WATERFRONT DEVELOPMENT

- Public Works truck leases (4) - $34,260
- City Hall car - $5,580

EQUIPMENT LEASES

- PW Equipment (Tag Along Trailer) – $75,000
- Replacement Front End Loader (644E) - $345,000
- Replacement 1 TN Dump Truck - $65,000
- Replacement Street Sweeper - $335,000
- Replacement Motor Grader - $310,000

PUBLIC WORKS EQUIPMENT

- Extractor - $25,000
- Intercept Vehicle Lease - $7,200
- EKG Cardiac Monitors - $265,000
- Restricted State/Local funding/donations - $28,300

FIRE EQUIPMENT

- Patrol vehicle leases - $55,000

POLICE EQUIPMENT

- Election Equipment - $15,000

COMPUTER EQUIPMENT

- Ore Dock Access Road - $1,447,000
- Beaser Ave Mill & Overlay (Design) - $142,000
- 3rd St W Mill & Overlay (Design) - $147,500
- Industrial Park Road Mill and Overlay - $29,500
- Prentice Avenue Ph 2 Reconst (Design) - $190,500
- MacArthur Ave Reconstruction (6th-11th) - $878,000
- Main St Reconstruction (Planning) - $15,000
- Main St E Reconstruction (Design) - $75,000
- PW Software Fuel System – $35,000

STREET IMPROVEMENTS

- DNR grant match - $10,000

URBAN FORESTRY

- Parks Master Plan - $59,000
- Prentice Campground Expansion - $100,000
- Redevelopment Kreher Park & Campground - $400,000
- ARTS Repair - 22nd Ave W Outfall to Sanborn Ave - $58,380
- 15th Avenue East Park Bench (restricted donation) - $7,000

PARKS AND GROUNDS

- Maintenance and equipment - $5,000

LANDFILL

- Downtown Manager - personnel costs - $73,500
- Oredock Upland Master Plan - $75,000
- Restricted Contributions - $5,150

COMMUNITY DEVELOPMENT

- 2023 Requests total $5,430,850

- 2023 Notes (every 3 years) $2,963,500
- $140,000 room tax
- $372,500 in General Fund spendable balance and short-term borrowing
- $1,559,500 in grants
- $169,500 vehicles and equipment trade ins
- $163,860 in existing capital fund balances
- $33,690 TIF increment
- $28,300 State funding restricted donations

FUNDING SOURCES

- Not funding the capital plan will result in the failure of neglected infrastructure
- City needs to study the true cost of ownership of its assets
- Review the community's expectations of service levels
- Secure and stable funding sources must be identified for now and into the future

SUSTAINABILITY

Ref: 2022-193

COMMITTEE AGENDA: 6.B.
(10/11/2022)

SUBJECT: **Discussion Regarding Wisconsin Department of Transportation Preliminary Design for Ellis Avenue/State Highway 13 Reconstruction Project *(Public Works)***

RECOMMENDATION: Discussion and Possible Action

DEPARTMENT OF ORIGIN: Public Works

CLEARANCES: Council President

EXHIBITS:

1.	Proposed Roadway Project
2.	Ellis Avenue/State Highway 13 Project plans
3.	Ellis Avenue Redevelopment Plan - 1998

SUMMARY STATEMENT:

The Wisconsin Department of Transportation (WI DOT) is planning a pavement replacement project along Ellis Avenue/State Highway13 in 2025. Pavement replacement offers some opportunity to redo aspects of the roadway but limits some options in that the entire roadway will not be reconstructed.

Federal funding is associated with this project and requires accommodation of pedestrian facilities (bike lanes). WI DOT has completed a traffic study with justification to reduce traffic lanes from two in either direction to one in either direction in order to accommodate the bike lanes.

Another major component of the project is the incorporation of a raised median from just south of Northland College to US Highway 2. City staff recommended this to the WI DOT in order to improve the character of the road as a major gateway to the City.

Information regarding the proposed road configuration is being provided to Council.

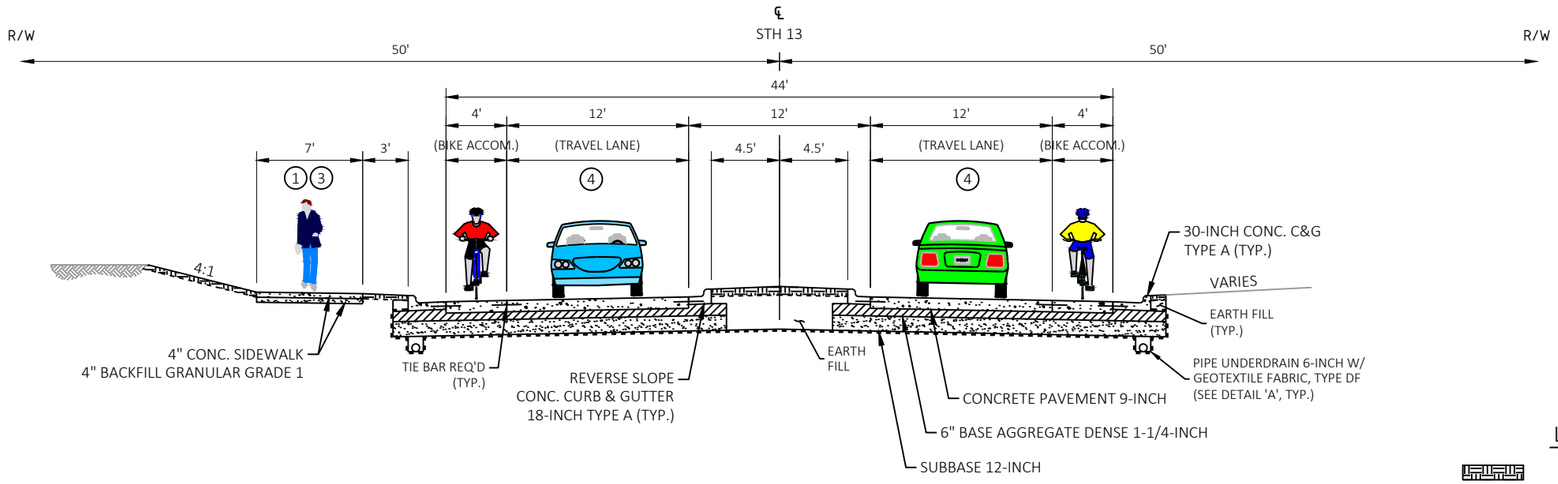

Alternative 'B'

4ft Paved Shoulders, 12ft Travel Lanes, 12ft Raised Median, Decorative Lighting, Sidewalk Replacement

FINISHED TYPICAL SECTION - STH 13 (ELLIS AVENUE)

16TH STREET TO ±360-FT SOUTH OF 12TH STREET
STA 1117+37 - 1128+25 (APPROXIMATE)

LEGEND

- TOPSOIL, SEED, FERTILIZER, EROSION MAT.
- (1) SEE PLAN AND PROFILE SHEETS FOR SIDEWALK AND CARRIAGE WALK LOCATIONS.
- (2) SEE PLAN AND PROFILE SHEETS FOR RAISED MEDIAN AND LEFT TURN LANE LOCATIONS.
- (3) SEE DETAILS FOR CURB RAMP LOCATIONS.
- (4) SLOPES VARY X.XX% - 2.00%. REFER TO CROSS-SECTIONS AND INTERSECTION DETAILS.

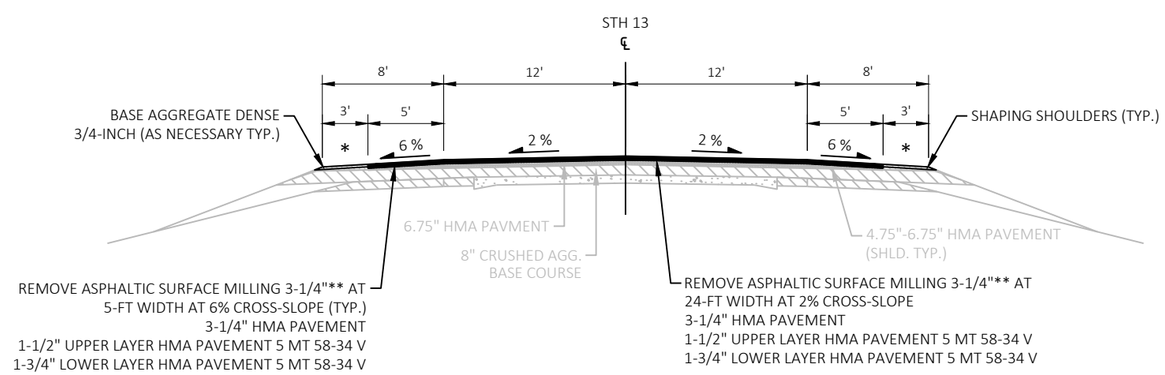

NOTE:
- * VARY FINISHED BASE AGGREGATE DENSE SHOULDER AS NEEDED TO MATCH EXISTING SHOULDER POINT. (6% MAX.)
- ** MEASURE MILLING DEPTH AT EDGE OF EXISTING 12-FT TRAFFIC LANE.

Alternative 'A' & 'B'

Mill and Resurface Existing Pavement

FINISHED TYPICAL SECTION - STH 13 (ELLIS AVENUE)

BUTTERWORTH ROAD TO 16TH STREET
STA 978+00 - 1117+37 (APPROXIMATE)

PROJECT NO: 1610-00-77	HWY: STH 13	COUNTY: ASHLAND	TYPICAL SECTIONS	SHEET	E

FILE NAME : W:\NWBE_PROJECTS\DESIGN\2106_WIS13-BUTTERWORTHROADTOUSH2\C3D-20\SHEETSPLAN\020301_TS-13.DWG
LAYOUT NAME - 01-10ft-AltB
PLOT DATE : 8/9/2022 4:09 PM PLOT BY : G. COLBERT PLOT NAME : PLOT SCALE : 1 IN:10 FT
WISDOT/CADDS SHEET 42

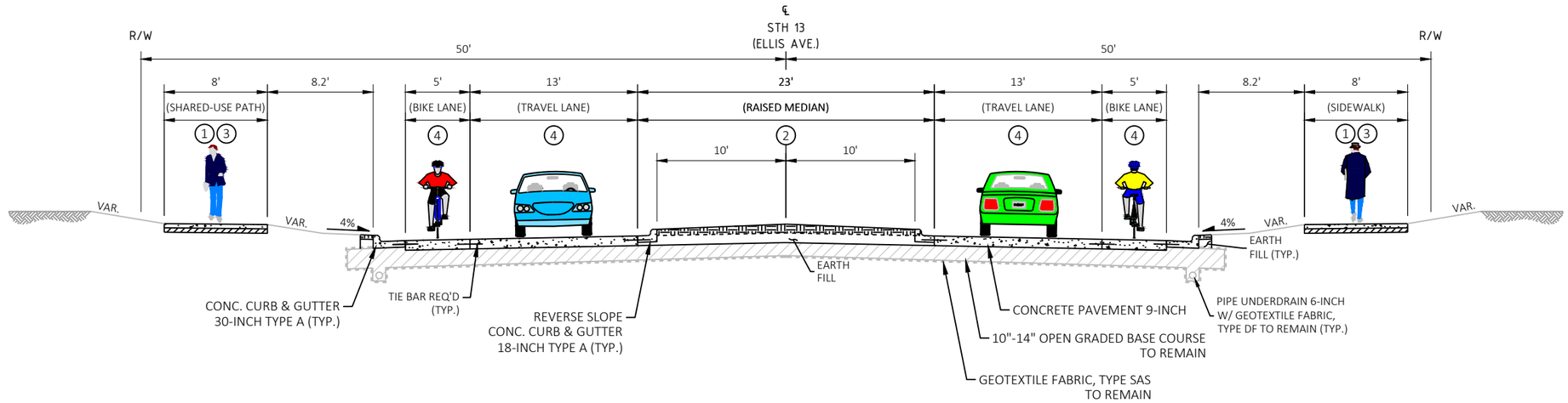

Alternative 'B'

5ft Bike Lanes, 13ft Travel Lanes w/ 12ft Left Turn Lanes, 23ft Raised Median, Refurbish Decorative Lighting, Curb Ramp Replacements

FINISHED TYPICAL SECTION - STH 13 (ELLIS AVENUE)

6TH STREET TO MAIN STREET
STA 1154+00 - 1168+65 (APPROXIMATE)

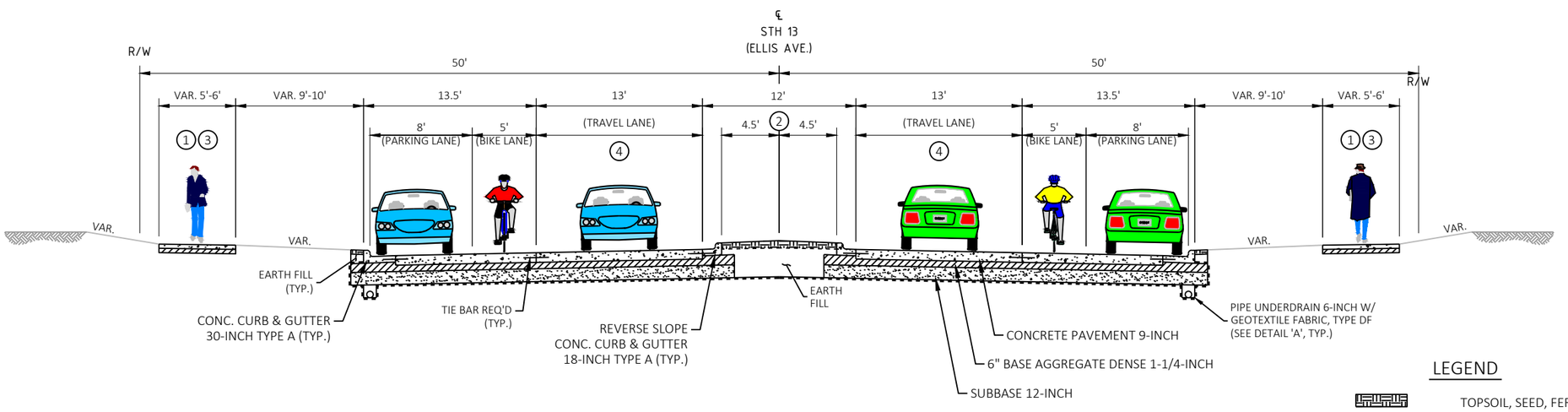

FINISHED TYPICAL SECTION - STH 13 (ELLIS AVENUE)

±360-FT SOUTH OF 12TH STREET TO 6TH STREET
STA 1128+25 - 1154+00 (APPROXIMATE)

Alternative 'A' and 'B'

8ft Parking Lanes, 5ft Bike Lanes, 13ft Travel Lanes, 12ft Raised Median, Refurbish Decorative Lighting, Curb Ramp Replacements

LEGEND

- TOPSOIL, SEED, FERTILIZER, EROSION MAT.
- (1) SEE PLAN AND PROFILE SHEETS FOR SIDEWALK AND CARRIAGE WALK LOCATIONS.
- (2) SEE PLAN AND PROFILE SHEETS FOR RAISED MEDIAN AND LEFT TURN LANE LOCATIONS.
- (3) SEE DETAILS FOR CURB RAMP LOCATIONS.
- (4) SLOPES VARY X.XX% - 2.00%. REFER TO CROSS-SECTIONS AND INTERSECTION DETAILS.

PROJECT NO: 1610-00-77	HWY: STH 13	COUNTY: ASHLAND	TYPICAL SECTIONS	SHEET	E

FILE NAME : W:\NWBE_PROJECTS\DESIGN\2106_WIS13-BUTTERWORTHROADTOUSH2\C3D-20\SHEETSPLAN\020301_TS-13.DWG
LAYOUT NAME - 02-10ft-AltB
PLOT DATE : 8/9/2022 4:09 PM PLOT BY : G. COLBERT PLOT NAME : PLOT SCALE : 1 IN:10 FT

WISDOT/CADDS SHEET 42

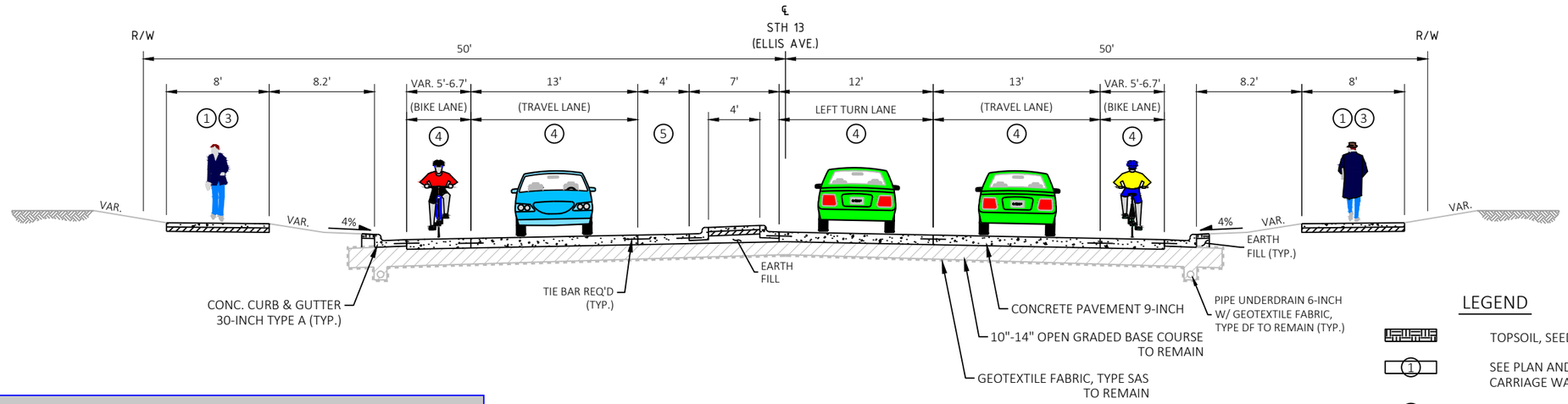

Alternative 'B'

5ft Bike Lanes, 13ft Travel Lanes, 4ft Widened Lane for Truck Turning, 7ft Raised Median, 12ft Left Turn Lane, Refurbish Decorative Lighting, Curb Ramp Replacements

FINISHED TYPICAL SECTION - STH 13 (ELLIS AVENUE)

MAIN STREET TO USH 2
STA 1171+00 - 1171+99 (APPROXIMATE)

LEGEND

- TOPSOIL, SEED, FERTILIZER, EROSION MAT.
- (1) SEE PLAN AND PROFILE SHEETS FOR SIDEWALK AND CARRIAGE WALK LOCATIONS.
- (2) SEE PLAN AND PROFILE SHEETS FOR RAISED MEDIAN AND LEFT TURN LANE LOCATIONS.
- (3) SEE DETAILS FOR CURB RAMP LOCATIONS.
- (4) SLOPES VARY X.XX% - 2.00%. REFER TO CROSS-SECTIONS AND INTERSECTION DETAILS.
- (5) WIDENED LANE REQUIRED FOR TRUCK TURNING.

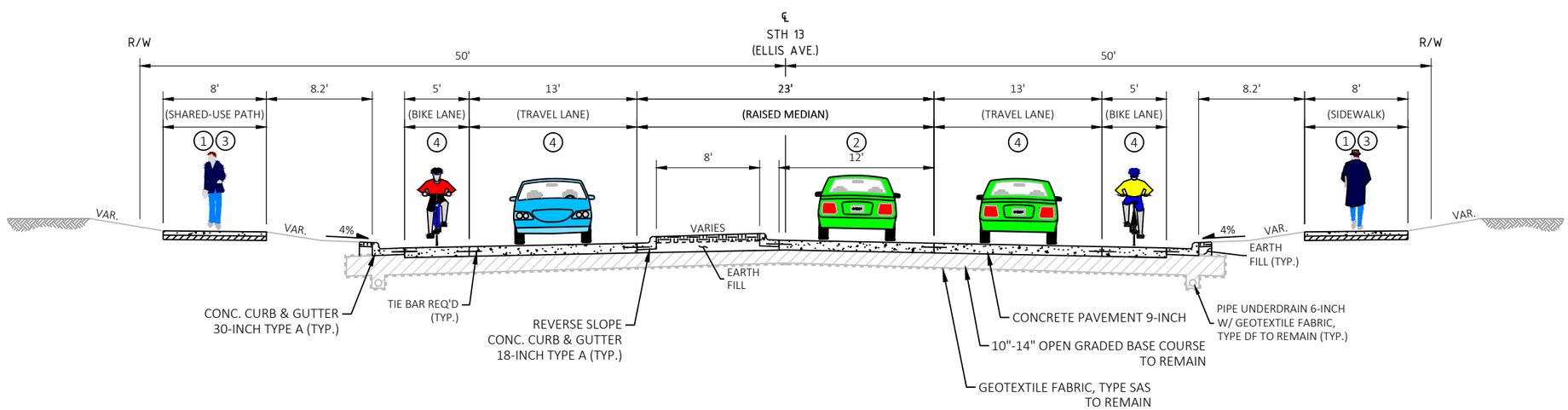

Alternative 'B'

5ft Bike Lanes, 13ft Travel Lanes w/ 12ft Left Turn Lanes, 23ft Raised Median, Refurbish Decorative Lighting, Curb Ramp Replacements

FINISHED TYPICAL SECTION - STH 13 (ELLIS AVENUE)

6TH STREET TO MAIN STREET (LEFT TURN LANES)
STA 1154+00 - 1171+00 (APPROXIMATE)

PROJECT NO: 1610-00-77	HWY: STH 13	COUNTY: ASHLAND	TYPICAL SECTIONS	SHEET	E

FILE NAME : W:\NWBE_PROJECTS\DESIGN\2106_WIS13-BUTTERWORTHROADTOUSH2\C3D-20\SHEETSPLAN\020301_TS-13.DWG
LAYOUT NAME - 03-10ft-AltB
PLOT DATE : 8/9/2022 4:09 PM PLOT BY : G. COLBERT PLOT NAME : PLOT SCALE : 1 IN:10 FT

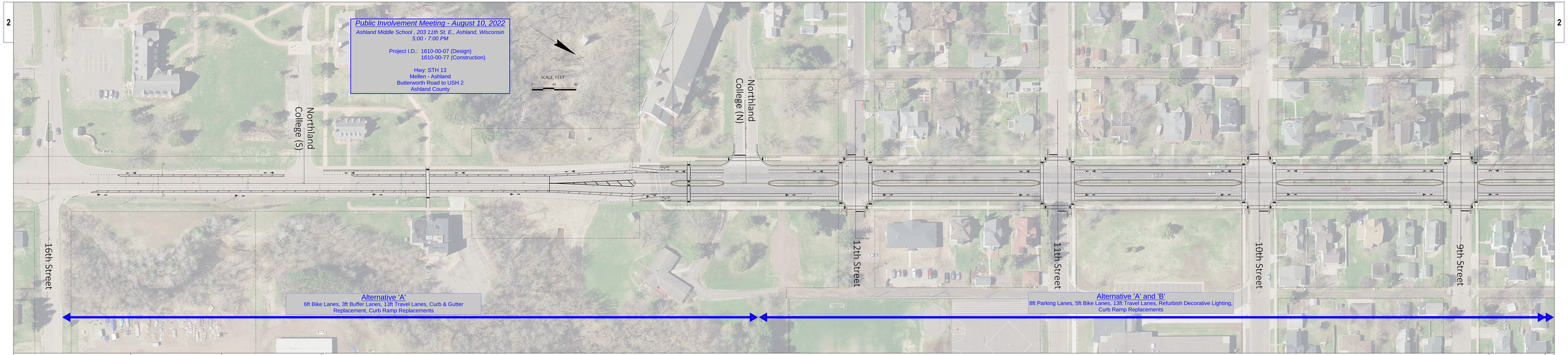

PROJECT NO: 1610-00-77	HWY: STH 13	COUNTY: ASHLAND	ALTERNATIVE 'A'	SHEET	E

FILE NAME : W:\WWBE_PROJECTS\DESIGN\2106_W0513-BUTTERWORTHROAD\TOUSH2\CSD-2D\SHEETS\OTHER\050201_PH-STH13-LOM-36X144.DWG
LAYOUT NAME : 13_pr-01-LOM
PLOT DATE : 8/1/2022 4:13 PM
PLOT BY : G. COLBERT
PLOT NAME :
PLOT SCALE : 1 IN 20 FT
WISDOT/CADDS SHEET 42

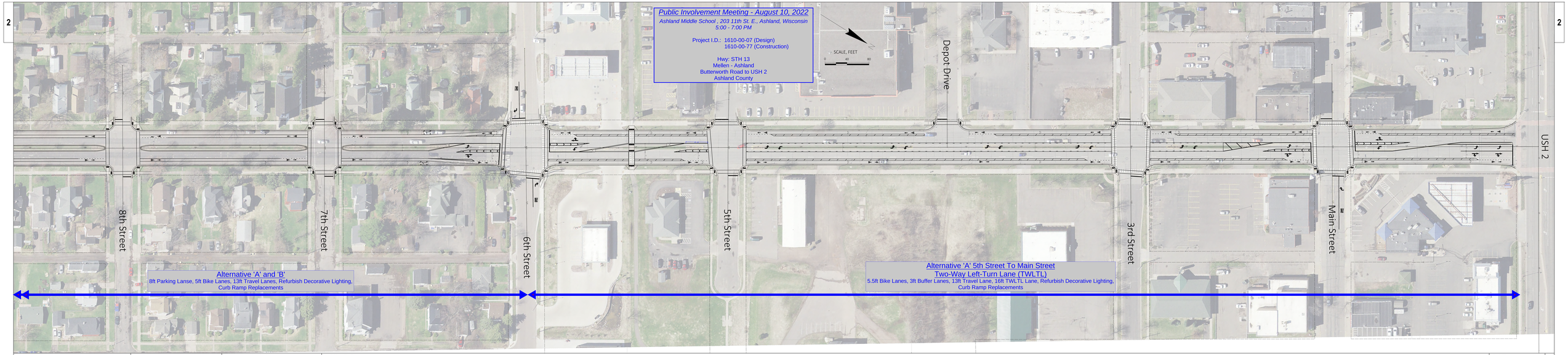

PROJECT NO: 1610-00-77	HWY: STH 13	COUNTY: ASHLAND	ALTERNATIVE 'A'	SHEET	E

FILE NAME : W:\WWBE_PROJECTS\DESIGN\2106_WI513-BUTTERWORTHROAD\TOUSH2\CSD-2D\SHEETS\OTHER\050201_PH-STH13-LOM-36X144.DWG
LAYOUT NAME : 13_pr-01-LOM
PLOT DATE : 8/1/2022 4:14 PM
PLOT BY : G. COLBERT
PLOT NAME :
PLOT SCALE : 1 IN:20 FT
WISDOT/CADDS SHEET 42

ELLIS AVENUE REDEVELOPMENT PLAN

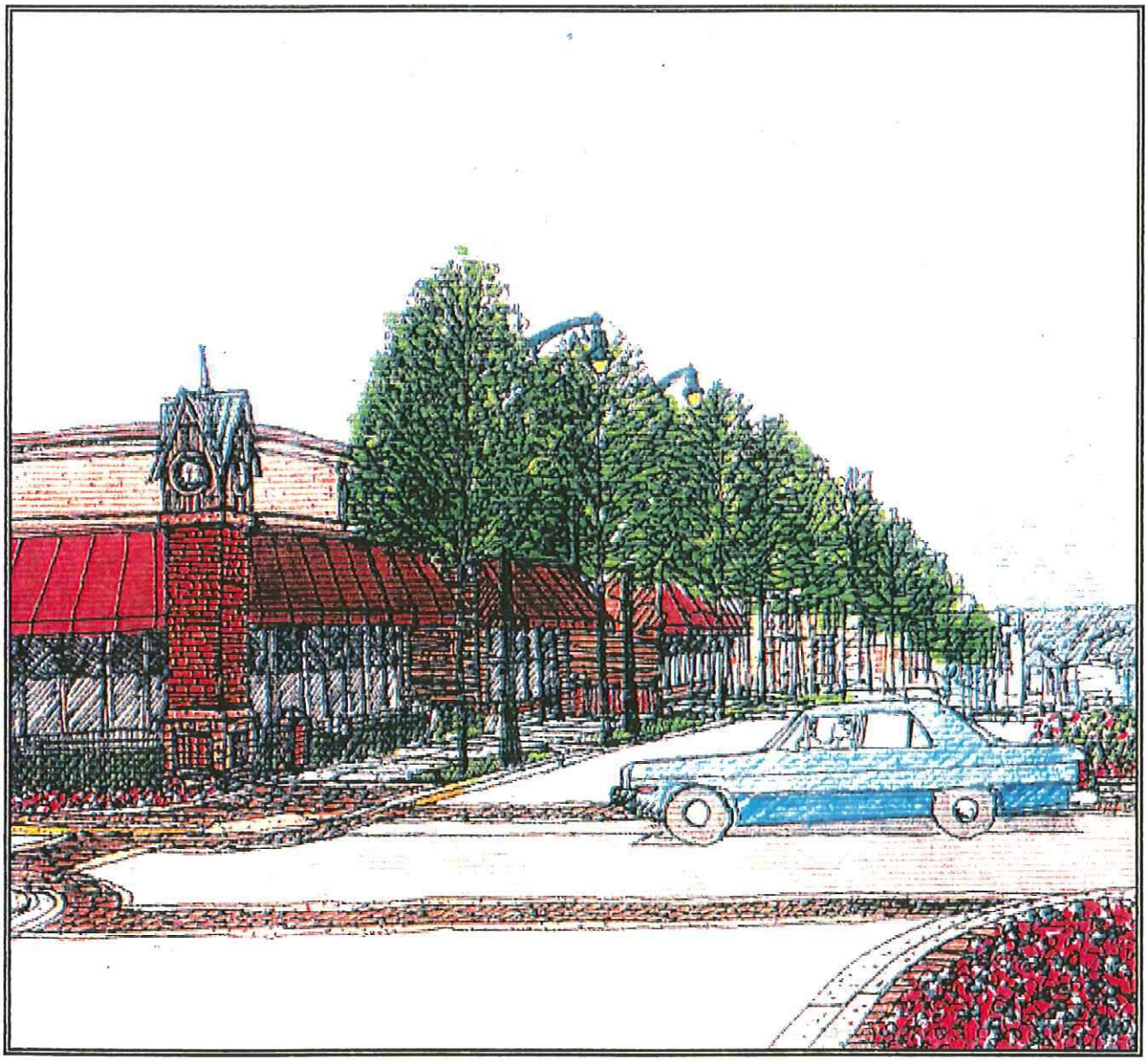

CITY OF ASHLAND
WISCONSIN

RLK-KUUSISTO, LTD.
Engineers and Planners

SANDERS WACKER BERGLY, INC.
Landscape Architects and Planners

1998

TABLE OF CONTENTS

ACKNOWLEDGMENTS

INTRODUCTION

ELLIS AVENUE CORRIDOR

- **Overview**
- **Urban Design Concept**
- **Street Layout**
- **Streetscape Elements**
- **Development Plan**

ELLIS AVENUE REDEVELOPMENT PLAN

- **Overview**
- **Urban Design Concept**
- **Site Plan**
- **Parking and Circulation**
- **Landscape Concept**
- **Architectural Concept**

DEVELOPMENT STANDARDS

- **Overview**
- **Lighting**
- **Landscaping**
- **Site Elements**
- **Parking and Service**
- **Architecture**

ACKNOWLEDGMENTS

ELLIS AVENUE CORRIDOR PLANNING AND REDEVELOPMENT TASK FORCE:

Mary Rehwald
Russ Korpela
Bill Schutte
Sue Martinson
Betty Harnisch
Jim Struck
Tom Moe
Lowell Miller
Rae Buckwheat
Butch Zipperer
Tony Murphy - City Administrator
Frank Kempf
Jim Ogilvie
Gary Ellefson
Pete Erickson
Jane Silbertstein
Hank Martinsen
Jim Paulson
Any Goyke
Randy Lund
Bob Miller
Bob Parsonage

CONSULTANT TEAM:

RLK-Kuusisto, Ltd.
Engineers and Planners
2 East First Street
Duluth, MN 55802
218-720-6219

Ken Larson, PE
- Project Manager
Richard Krier, AICP
- Senior Planner
Kjersti Hagman
- Project Planner

Sanders Wacker Bergly, Inc.
Landscape Architects and Planners
365 East Kellogg Boulevard
Saint Paul, MN 55101
651-221-0401

William Sanders, FASLA
- Principal Landscape Architect
Mark Salzman, RLA
- Senior Landscape Architect
Joe Favour, RLA
- Project Landscape Architect

INTRODUCTION

The City of Ashland has a unique opportunity to redevelop the property on the south edge of the downtown business district. This area is bounded by the depot and Civic Center on the north, Sixth Street on the south, Vaughn Avenue on the west and Ellis Avenue on the east. Much of the project area is former railroad property that has had the tracks removed and soil correction completed in anticipation of future development.

The west half of this area has been designated as a park site and will be developed by the City of Ashland Leisure Services as an active Community Park and Playfield. Current plans propose ballfields, tennis and basketball courts, hockey, dirt bike track, trails and Civic Center expansion.

The east half of this area has been proposed for new development. A new County Market has been completed. Martinsen Investment and Land Company is proposing to develop the remainder of the site for retail and office use.

Ellis Avenue is schedule for reconstruction from Sixth Street to Highway 2. The street is proposed for new surfacing, center median, curb and gutter, lighting and landscaping.

There are also many opportunities for redevelopment of the properties along the Ellis Avenue corridor.

The City of Ashland recognizes the unique opportunity that exists for this area and has challenged the consultant team to put together an exciting, creative plan that captures the vision of the community.

The vision of the City of Ashland is for a new urban area that is a major asset for the community, one that strengthens the downtown business district, complements existing retail businesses, improves the tax base, maintains a high standard for quality of life and aesthetic image, provides pedestrian connections to the downtown business district and the neighborhoods, provides open space, recreation and trails, provides an inviting gateway and entrance to the downtown, expresses the history and character of the community and has a sense of place that makes it recognizable as a special part of the downtown area.

ELLIS AVENUE CORRIDOR

OVERVIEW

Ellis Avenue is the main approach to downtown Ashland from the south and connects Northland College to the downtown and waterfront. Ellis Avenue is proposed to be reconstructed from 6th Street to Highway 2. There are currently many areas of vacant and underutilized land along the corridor that are proposed for redevelopment as part of the Plan.

URBAN DESIGN CONCEPT

The Ellis Avenue Corridor is proposed as a major gateway or entrance to the downtown business district. An entrance feature is proposed on each side of Ellis Avenue at 6th Street. Another feature marks the corner of Main Street and Ellis Avenue, calling attention to Main Street as the heart of the downtown business district. It is recommended that new buildings be developed close to the street and that sidewalks be constructed on both sides to give the street a pedestrian friendly, urban, downtown character.

STREET LAYOUT

Ellis Avenue is proposed to be reconstructed with a landscaped center median, two lanes of traffic in each direction, grass boulevards on each side of the street, and sidewalks on each side of the street.

STREETSCAPE ELEMENTS

Landscape:

Boulevard trees should be planted on each side of the street, approximately 30' - 40' o.c. Possible trees include Northwoods Red Maple, Common Hackberry, Patmore Ash, "Purple Robe", Black Locust and American Linden.

Flowering shrubs should be planted in the center median. Possible shrubs include hardy shrub roses, dwarf bush honeysuckle, Annabelle hydrangea and dwarf spirea.

Lighting:

Decorative roadway light fixtures should be installed on both sides of the street at approximately 100' o.c. The roadway lights should have a cut-off design to reduce light glare and trespass on adjacent properties. The light fixtures should be approximately 25' in height with either metal halide or high pressure sodium lamps. Spacing of lights, height and wattage of lamps should be adjusted to meet optimum light levels as approved by the City and Department of Transportation.

Poles should be black or dark green in color and be furnished with banner arms and duplex receptacles.

Entrance Features:

Entrance features are proposed for each side of Ellis Avenue at 6th Street and at the NE corner of Ellis and Main Street. The features include a column element, approximately 16-18 feet in height, designed with brick and stone to reflect the traditional architecture of Northland College, the Depot and the Downtown. These elements may include public art, historic symbols, lighting and other items of special interest.

The entrance features should be complimented with a small landscaped area that is defined by decorative iron fencing, small column elements, special paving, benches and colorful plantings of flowering trees, shrubs, perennials and annuals.

Decorative Fence:

Decorative iron fencing is proposed at certain areas along the Corridor at part of the landscaping that is used to screen and soften parking areas, vacant parcels and storage areas or to give added definition to landscaped spaces and mini parks. The fencing should be designed to compliment the traditional streetscape appearance. Colors should be black or dark green to match other elements.

Benches:

Benches should be placed at various places along the Corridor to provide comfortable seating, to support landscaping and to give the area the feeling of being welcome to visitors and friendly to pedestrians. The benches are proposed to be traditional metal strap design, painted in black or dark green.

Planters:

Planters should be placed at strategic places along the Corridor to compliment buildings and other streetscape components. Traditional metal planters of various shapes, painted to match other furnishings, are proposed.

DEVELOPMENT PLAN

The Ellis Avenue Corridor, from 6th Street to Highway 2, has many parcels of vacant or underutilized land that are recommended for redevelopment. The development plan for the Ellis Avenue Corridor recommends that the following basic principles be applied:

- The view corridor down Ellis Avenue to the Waterfront is important to maintain and enhance.
- The Corridor should compliment the urban character of the downtown business district.
- The Corridor should be pedestrian friendly, with attractive landscaping, sidewalks and streetscape furnishings.

To accomplish these principles the following detailed recommendations should be considered.

- The roadway section of Ellis Avenue should emphasize the view to the waterfront by keeping the taller trees and light fixtures to the side and lower plantings in the center.
- The buildings should be built close to the street right-of-way and have windows and doorways facing the street and public sidewalks.
- The buildings should have a scale of one to five stories, and traditional facades with windows, doors, roof forms and detailing to compliment the architecture of Northland College, the Depot and the Downtown.
- Driveway access to Ellis Avenue should be minimal and parking areas should be primarily behind the buildings.
- Small pedestrian spaces, such as landscaped areas, mini-parks and courtyards should be placed at various locations along the corridor.
- The streetscaping should be designed to unify the varied pattern of development along the corridor, with

an emphasis on pedestrian amenities.

ELLIS AVENUE REDEVELOPMENT AREA

OVERVIEW

The Ellis Avenue Redevelopment Area includes the former railroad property between the Depot and 6th Street, and between Ellis Avenue and Vaughn Avenue. The west half of this area will be redeveloped as park space, the planning of which is being done by the City of Ashland Leisure Services. The park space is shown on the plans for this project for the purpose of coordinating the plans and providing good connections between the public and private projects. The focus of this study is the private redevelopment of the eastern portion of the site, which has started with the County Market Project.

URBAN DESIGN CONCEPT

The urban design concept proposes a traditional development plan that is compatible in scale and design to the Depot, compliments the Downtown, provides connections to the neighborhood, downtown and waterfront and emphasizes the pedestrian.

SITE PLAN

The site plan is arranged to effectively incorporate the exiting Depot and the existing County Market with the proposed new development. A ceremonial plaza and open space is proposed south of the Depot and is defined by the Depot, the Civic Center expansion and the proposed private development site. Another major space is the main parking area, defined by the County Market and new development.. Buildings are sited close to Ellis Avenue and 6th Street to avoid the unattractive suburban approach of streetscapes that are dominated by open parking lots.

PARKING AND CIRCULATION

The main access to the site is from Ellis Avenue near the County Market. Secondary access is provided from Depot Drive, 6th Street and from Ellis Avenue. Vehicular circulation is provided by a main loop drive with direct access to the various parking lot sections. The concept plan shows approximately 475 parking spaces, which would allow

development of approximately 60,000 sq. ft. of commercial space in addition to the County Market. Commercial space generally requires approximately 5 parking spaces for every 1000 sf of building.

LANDSCAPE CONCEPT

The landscape throughout the redevelopment area plays an important role in the image of the project. Landscaping is used to define space and to break up the scale of the large parking areas. The landscaping provides shade, color and texture to create a more comfortable pedestrian space. Landscaping is proposed at the entrances into the development area to make an inviting and attractive statement to the customer and passers-by.

ARCHITECTURAL CONCEPT

This area has very strong ties, both historically and visually, to the Depot, which is a wonderful work of architecture and which should influence the architecture of future buildings in the area. Other influences that might be recalled in this area are Northland College and the Downtown District. It is recommended that the future buildings have gable roofs, generally rectangular forms and special features. Animation of the roofs can be achieved through the use of dormers, pediments and cross-gables. Special features may include the building entrances or the building corners that face major entrances, as reflected in the concept plan. Buildings should have multiple windows that follow traditional architectural patterns of fenestration. Building materials should be predominantly brick with brick and stone detailing.

ELLIS AVENUE DEVELOPMENT STANDARDS

Although there are basic design criteria in the zoning ordinance and several other ordinances, there has not been an effort to require a reasonable but high level of standards related to either the public infrastructure or private development.

The following are suggested standards:

STREET LIGHTING

All lighting of public street throughout the area will be the responsibility of the City. The design and engineering of the system, including materials, location and spacing of poles will be determined by the City.

Specific poles and luminaires will be selected as an integral part of the lighting program. The character of the poles and fixtures should be consistent with the other street furniture selected for this district.

PARKING AREA LIGHTING

Lighting of new parking areas will be the developers/ business responsibility. The layout of the luminaires will be determined by the developer for each site with consideration to security and performance standards established by the business improvement district. The proposed lighting system will be reviewed by the City.

Poles are to be the same chosen for public roadway lighting. Luminaires are to be mounted at 20 to 25' feet with cut-off luminaires to prevent off site glare

PEDESTRIAN SYSTEM LIGHTING

The lighting of walkways not adjacent to lit roadways will be the developers/business responsibility. The proposed system will be reviewed by the City.

To insure continuity of design , the standard pole and luminaire will be selected by the City.

PLANT MATERIAL

The Street trees will be the responsibility of the City and will be planted to:

- Provide identity and continuity to the district.
- Provide beauty and shade.
- Decrease air pollution.

The trees will be planted along public streets within the boulevard areas.

The plant material for residential/ commercial boundaries should be used to:

- Provide year round color, texture and beauty to the area.
- Provide visual separation without providing hiding places.
- Provide physical barriers where needed.

Specific plant material should be selected to:

- Provide security.
- Provide year round interest.
- Provide a feeling of peace and tranquility.
- Provide shade
- Screen undesirable views
- Provide traffic control

Innovative use of planting materials will be encouraged.

Plant material should be selected which will:

- Be salt tolerant and disease resistant.
- Not bear fruit which might cause maintenance problems.
- Not constitute danger to the public.

BUILDING STRUCTURES:

High design standards must be maintained in new and renovated buildings development to improve the visual quality of Ashland. These buildings should be designed to be harmonious in scale, materials, and detailing of the significant historic buildings in this district. Examples

include.....

DESIGN GUIDELINES:

Primary Building Materials

Building materials should be consistent with those in this district including stone, brick, stucco, cast stone, and architectural precast.

Building materials should be high quality, warm, and natural.

Similar Facade Treatment.

Facades for each development should use the same primary building material(s). The developer must submit drawings of proposed building elevations as part of the design review process. Following are examples of acceptable building facades.

The backs of buildings/ service areas should be maintained as they are important to the visual quality of a development. These areas cannot be neglected.

Color.

Color is an important component of building character. Color harmony in a development is critical and a developer must submit a pallette of proposed colors as part of the design review process.

Color of buildings are to be harmonious with adjoining developments or buildings.

Storage

The character of the district will be negatively impacted by unsightly storage areas. All storage and trash areas should be completely enclosed. Wherever possible, the storage and trash areas should be within the building.

Security

Create defensible buildings by:

- Limiting the number of secured access points.

- Lobby area should be visible from the parking lot and street.

Signs

Exterior signs for business's should be designed as an integral part of the building. Primary considerations should be:

Materials

These should complement the overall building design. Examples of sign material are: cast bronze. stone, cast aluminum, masonry. Backlit signs should be discouraged.

Scale

While building mounted signs must be readily visible from nearby walks and streets it is important that signs be designed in scale and proportion to the building itself.

Placement

Signs should be an orderly and cohesive element of a building. Building signs could in sign bands or grouped.

Signs provide a business identity by using emblems, colors, and letter styles. The use of graphics to reduce text is encouraged.

Well designed custom street signs will enhance the visual quality of the district. Where possible these signs should be designed as an integral component of ornamental street lights.

Pedestrian Amenities

The following major street furnishings and design techniques should be used along the pedestrian walkways. The appropriate use of these elements in conjunction with landscape, lighting, and building elements will contribute to a unified design identity.

Pedestrian amenities should be inviting and create a human scale to the street experience. Following are guidelines and detailed design will be addressed as implementation proceeds.

PAVING

While the width of the major pedestrian walkways will vary throughout the area, the minimum width should be five feet and eight feet along downtown and other retail areas. Efforts should be made to increase that width where possible to create pedestrian plazas and courtyards. Outdoor café seating should be encouraged.

Paving options include brick, stone, concrete pavers, stamped and colored concrete, and textured concrete. As with buildings careful thought must be given to paving color selection.

Developers of new projects will be responsible to carry out these standards where walkways are on private property.

BENCHES

Seating locations will be jointly determined by the city and the developer/business. Benches should be located in outdoor areas where people are apt to congregate, such as, courtyards, plazas, and at intersections of the major pedestrian walks. The city will be responsible for selecting a group of bench options.

BIKE RACKS

As with benches, bicycle rack locations will be jointly determined by the city and developer/business. The city will be responsible for selecting a group of bicycle rack options.

TRASH CONTAINERS

Trash Containers Should be placed periodically throughout the area. Containers should be easily recognizable and easily serviced. The city will select a standard trash container and will be responsible for selecting and installing them in appropriate locations.

SCULPTURE AND FOUNTAINS

The use of sculptures and fountains is encouraged throughout the area. These should be considered in areas of courtyards and plazas.

BUS SHELTERS

Shelters will be provided at selected bus stops and turnouts throughout the area. The DTA, in consultation with the city, will be responsible for the installation. The character of the shelters shall be compatible with the area.

Shelters should incorporate the following features:

- Roof
- Walls (Windbreak).
- Bench
- Lighting.
- Route and Schedule Information.
- Public Telephone (where warranted).
- Security device for immediate response.

OFF STREET PARKING

Location. Parking to be located behind buildings wherever possible and especially in the major entrances to Ashland and the Business Improvement District.

Accessible Parking Bays. The following are guidelines excerpted from ADA parking guidelines. The typical accessible parking space is 96" wide with an adjacent 60" access aisle. The 60" wide aisle does not permit adequate depth for lifts or ramps to be deployed and still leave room for a person using a wheelchair or other mobility aid to exit the lift platform or ramp. The "van accessible" parking space requires a 96" wide space with an adjacent 96" wide aisle. A sign is needed to alert van users to the presence of the wider aisle, but the space is not intended to be restricted only to vans.

Guidelines for number of accessible stalls.

Total Parking in Lot	*Required Minimum # of Accessible Spaces*
1 to 25	1
26 to 50	2
51 to 75	3
76 to 100	4
101 to 150	5
151 to 200	6

201 to 300	7
301 to 400	8
401 to 500	9
501 to 1000	2% of total
1001 and over	20 plus 1 for each 100 over 1000

In addition, one in every eight stalls, but not less than one, shall have a 96" wide van accessible aisle.

Screening

All parking, loading service, and outdoor storage areas shall be screened from all public streets and adjacent differing land use by a combination of any of the following: earth mounds, walls, fences, shrubs, deciduous over-story, understory or coniferous trees or hedge materials. The height and depth of the screening shall be consistent with the height and size of the area to be screened. When natural materials such as trees or hedges, are used to meet the screening requirements of this item, density and species of planting shall be such as to achieve 75% opacity year-round at maturity.

Landscape Islands/ Peninsulas

Landscaped islands and peninsulas must be irrigated. Landscaped Islands are to be a minimum of 36' long by 8.5' wide. (Equal to 2 parking stalls.) Landscaped peninsulas are to be a minimum of 18' long by 8.5' wide. (Equal to 1 parking stall.)

Pedestrian pathway must be provided in large lots to major building entrances. Pedestrian lighting shall be placed along the pedestrian pathway.

Private access streets shall be a minimum of 25' back to back of curb with no parking. Curbing to be B-612.

All parking lots shall be a 4' minimum from sidewalks and 12' from street and major drives. The parking lot shall be lined with deciduous trees. Sidewalks shall be placed along all streets and drives and shall be placed a minimum of 4' from the back of curbs.

Loading and Storage Areas

Loading areas must provide clearance for truck and a 24' driveway isle for passing.

Where appropriate all storage must be within the building or enclosed in storage lockers, which are part of the building. All outside storage areas will include walls and roofs with the same design and the same material as the principal building.

Storage areas and garbage dumpsters be entirely enclosed and made of the same material(s) as the principal building.

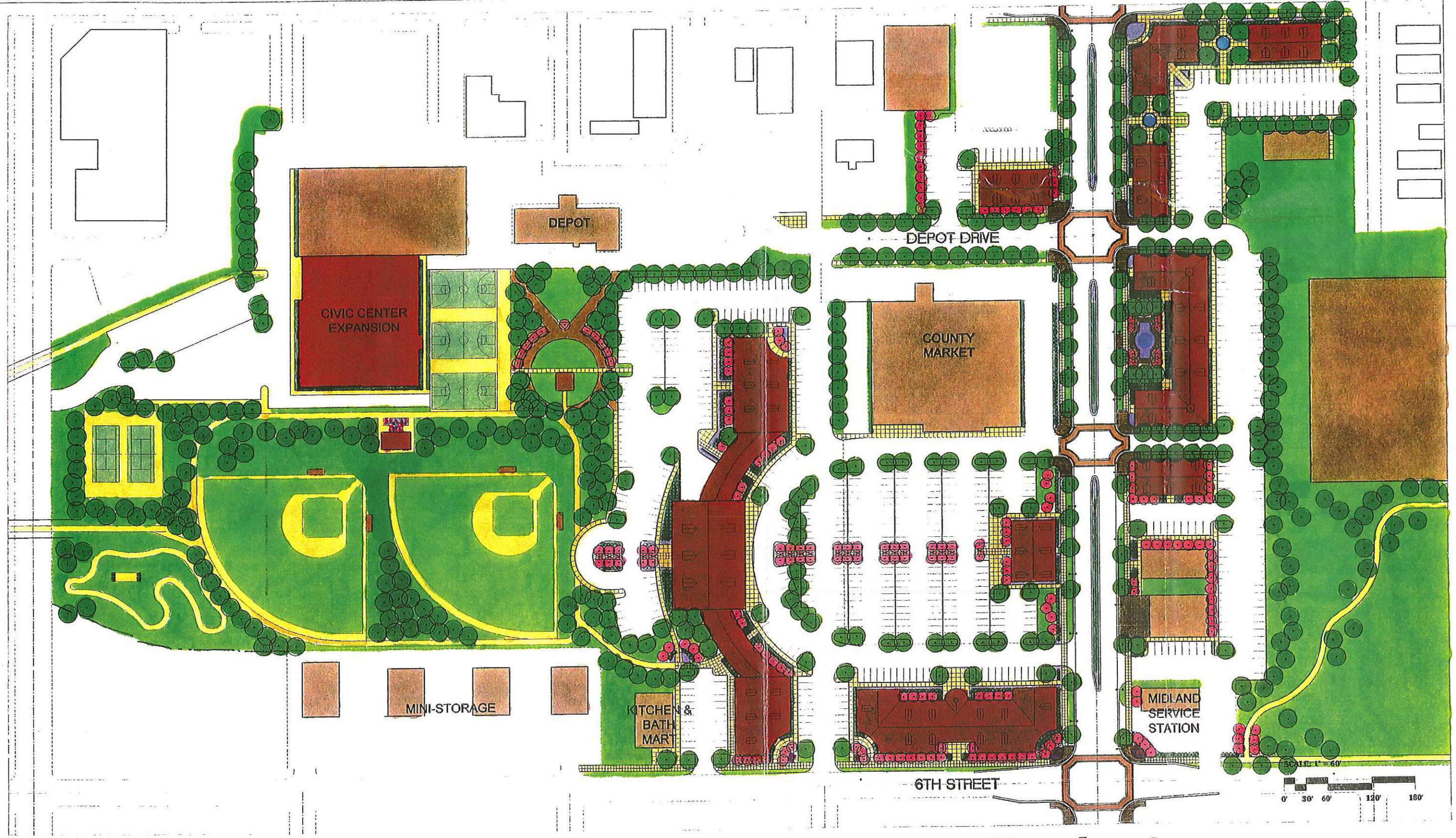

Ellis Avenue Redevelopment Project

Ashland, Wisconsin

RLK Kousisto Ltd
6110 Blue Circle Dr.
Suite #100
Minnetonka, Mn.
55343
(612) 933-0972
Fax: (612) 933-1163

Sanders Wacker Bergly Inc.
Landscape Architects and Planners
213 East Kilroy Boulevard
Saint Paul, Minnesota 55104
Phone (612) 221-0403
Fax: (612) 297-6457
E-mail: swb@uslinet.com

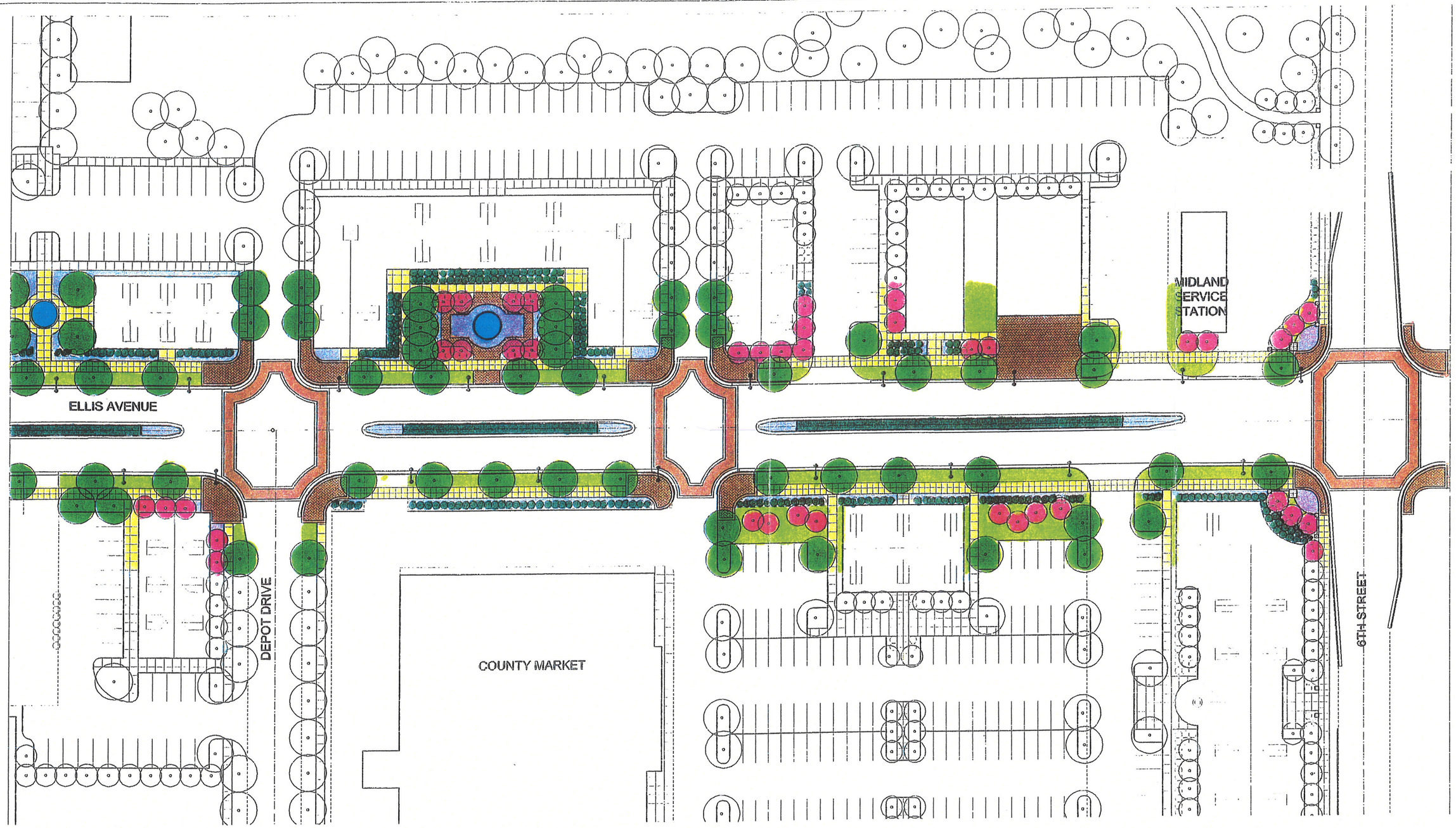

Ellis Avenue Redevelopment Project

Ashland, Wisconsin

RLK KOUSISTO LTD
6110 Blue Circle Dr.
Suite #100
Minnetonka, Mn.
55343
(612) 933-0972
Fax: (612) 933-1163

ENGINEERS
TRACKER
CORGLY
ETC.
LANDSCAPE
ARCHITECTS
AND
PLANNERS
233 East Kellogg Boulevard
Saint Paul, Minnesota 55101
Phone (612) 223-0421
Fax: (612) 297-5757
E-mail: est@estlandscape.com

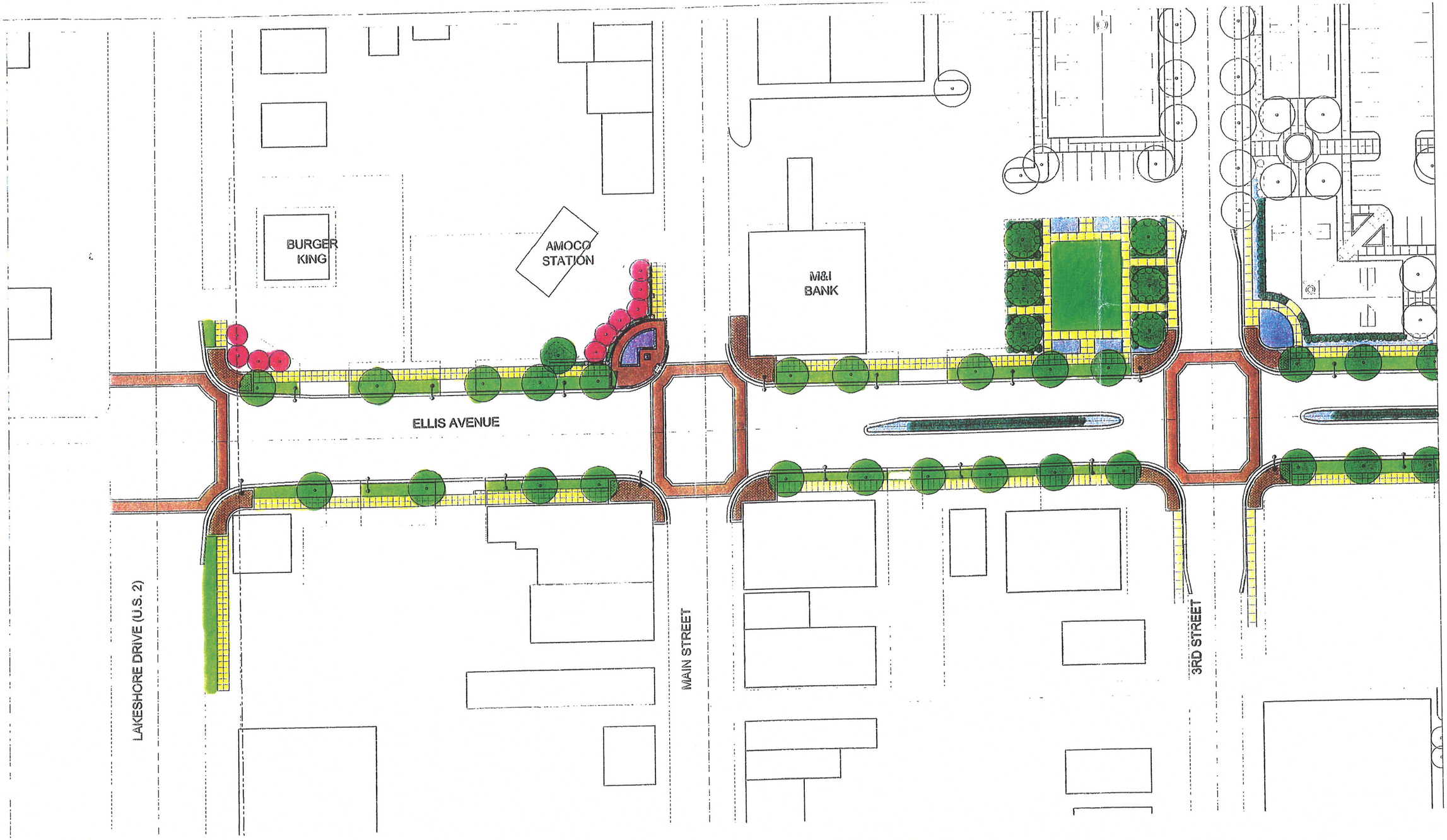

Ellis Avenue Redevelopment Project

Ashland, Wisconsin

RLK
KOUSNETS CUD
6110 Blue Circle Dr.
Suite #100
Minnetonka, Mn.
55343
(612) 933-0972
Fax: (612) 933-1163

GANGERS
VACKER
COTGLY
DIO.
LANDSCAPE
ARCHITECTS
AND
PLANNERS
350 Cook Bishop Oakwood
Oak Park, Illinois 60302
Phone (312) 238-0488
Fax (312) 297-0387
E-mail: cotlm@aol.com

VIEW OF CORNER FEATURE AT MAIN STREET

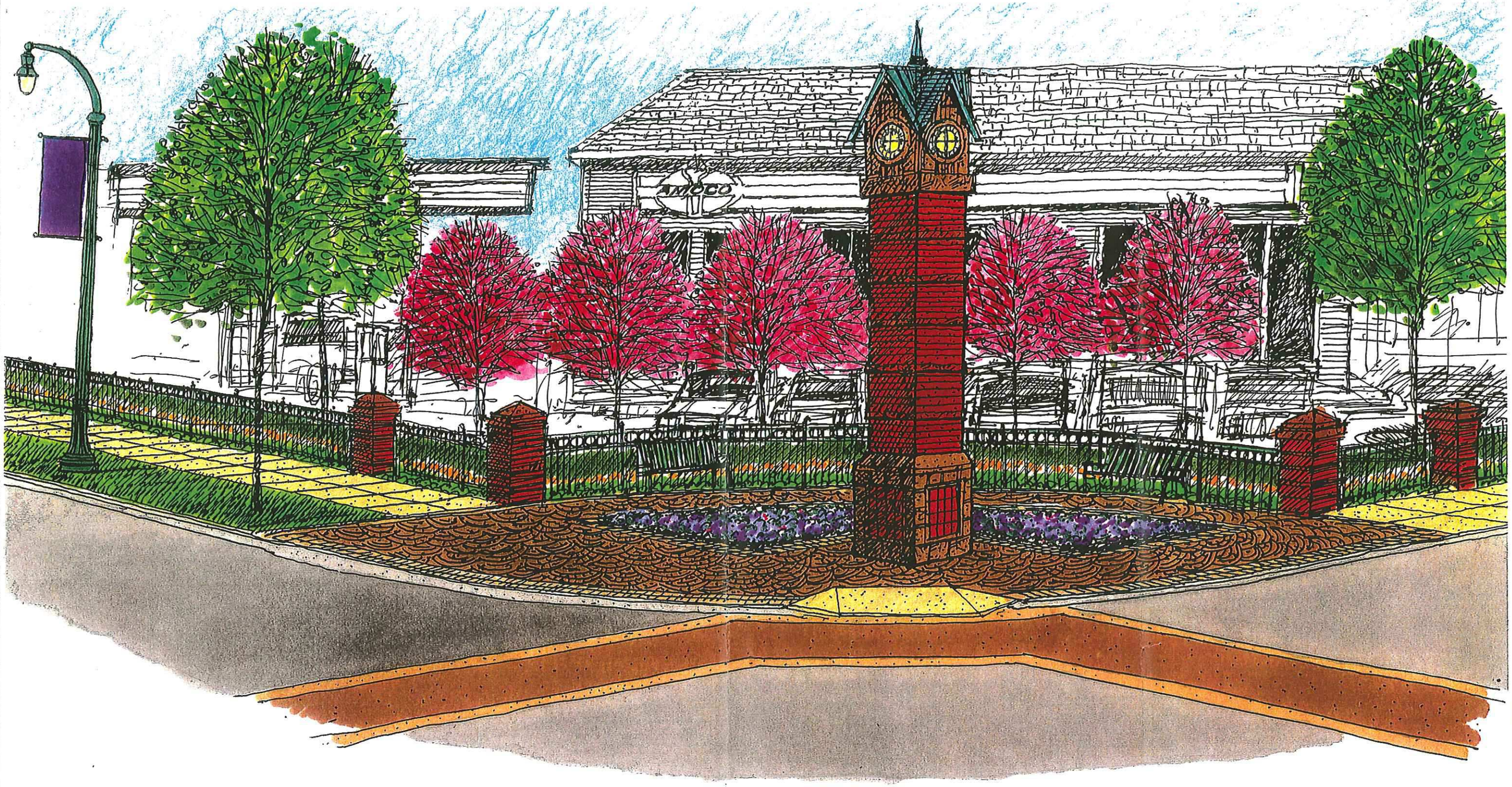

Ellis Avenue Redevelopment Project

Ashland, Wisconsin

RLK KOUSISTO LTD.
6110 Blue Circle Dr.
Suite #100
Minnetonka, Mn.
55343
(612) 933-0972
Fax: (612) 933-1163

SANDERS WACKER DERGLY INC. LANDSCAPE ARCHITECTS AND PLANNERS
303 East Kellogg Boulevard
Saint Paul, Minnesota 55101
Phone: (612) 223-0425
Fax: (612) 297-4217
E-mail: sdd@sdd.lanet.com

PLAN VIEW OF CORNER FEATURE AT MAIN STREET

Ellis Avenue Redevelopment Project

Ashland, Wisconsin

RLK Roushsto Ltd

8110 Blue Circle Dr.
Suite #100
Minnetonka, Mn.
55343

(612) 933-0972
Fax: (612) 933-1163

SANDERS WACKER BERGLY SISL
LANDSCAPE ARCHITECTS AND PLANNERS
350 East Kellogg Boulevard
Saint Paul, Minnesota 55101
Phone: (612) 227-7420
Fax: (612) 227-1267
E-mail: sisl@saintpaul.com

VIEW TOWARDS LAKE FROM INTERSECTION OF 6TH & ELLIS

Ellis Avenue Redevelopment Project

Ashland, Wisconsin

RLK KOUSISTO LTD

6110 Blue Circle Dr.
Suite #100
Minnetonka, Mn.
55343

(612) 933-0972
Fax: (612) 933-1163

SANDERS WACKER BERGLY INC.
LANDSCAPE ARCHITECTS AND PLANNERS
265 East Kellogg Boulevard
Saint Paul, Minnesota 55101
Phone (612) 291-0429
Fax: (612) 297-4817
E-mail: sanders@sanderstudio.com

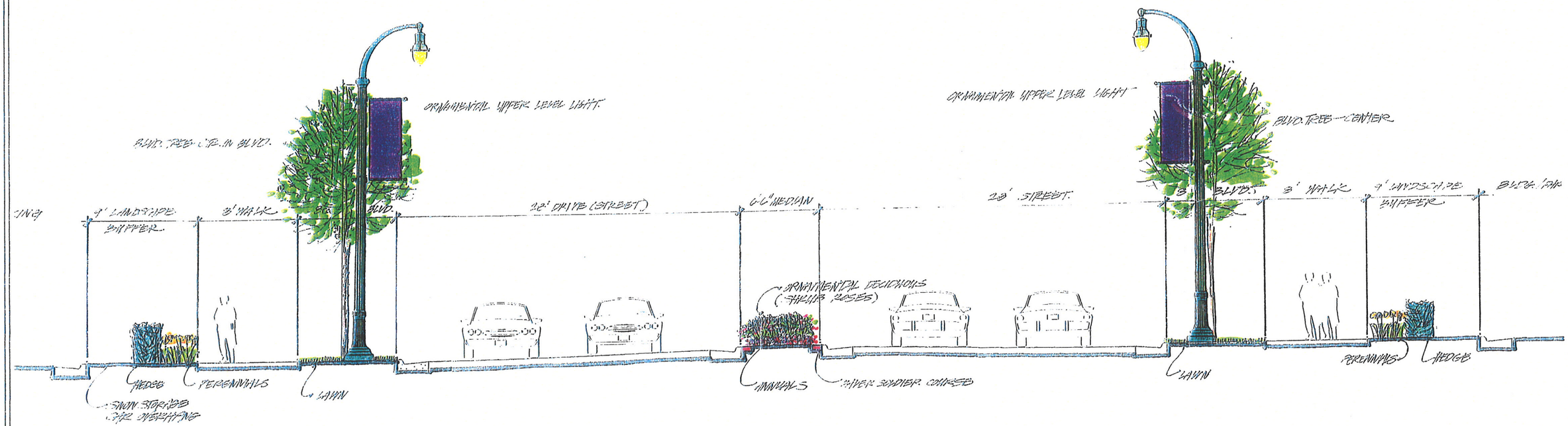

ELLIS AVENUE- TYPICAL SECTION

Ellis Avenue Redevelopment Project

Ashland, Wisconsin

RLK ROUSSELO LTD
6110 Blue Circle Dr.
Suite 7100
Minnetonka, Mn.
55343
(612) 933-0972
Fax: (612) 933-1153

SANDERS WACKER BERGLY AND LANDSCAPE ARCHITECTS PLANNERS
330 East Kilbourn Boulevard
Suite Four, Milwaukee 53202
Phone (414) 221-0420
Fax (414) 297-0287
E-mail sawb@sabcomet.com

STREET FURNISHINGS

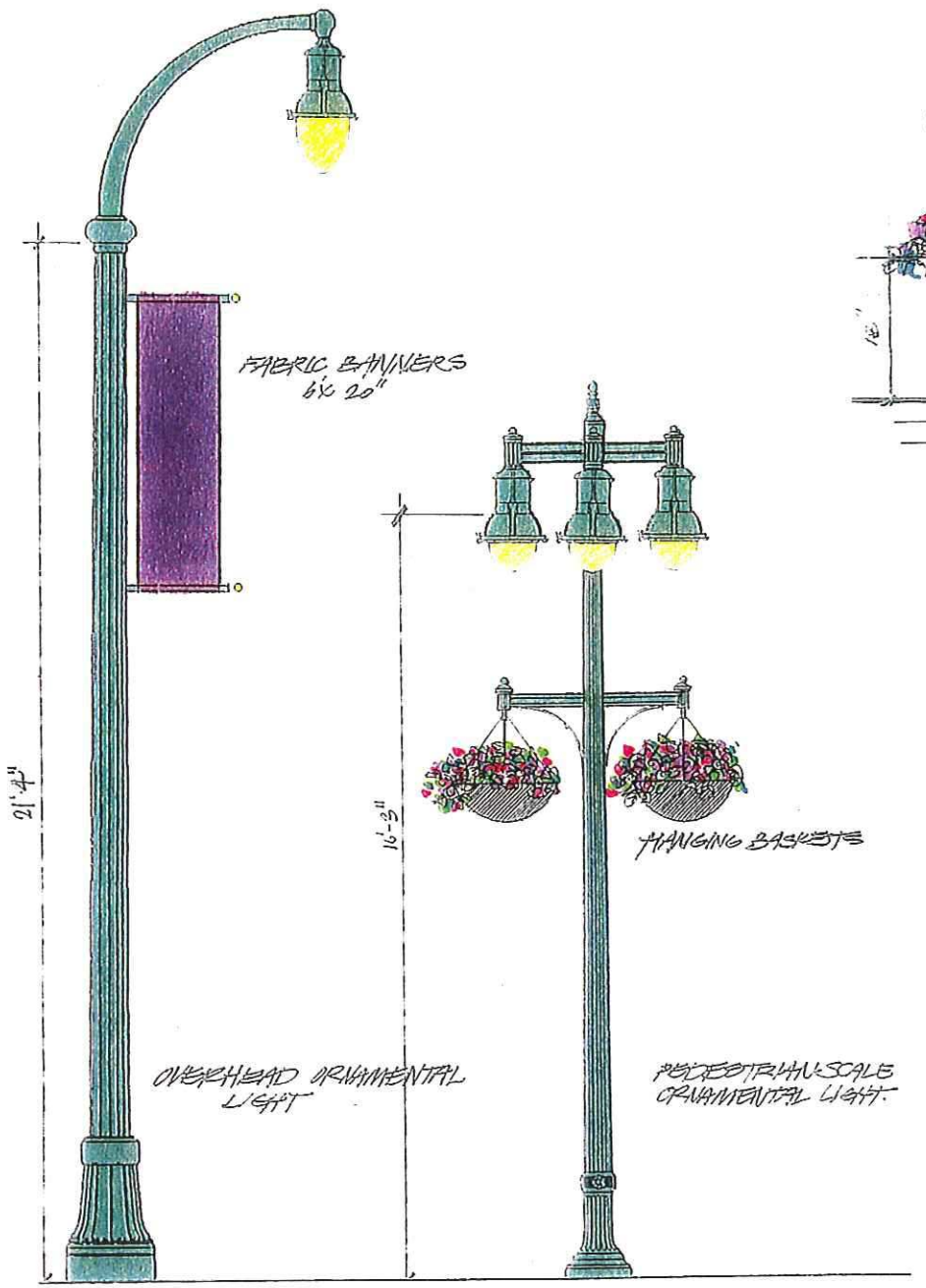

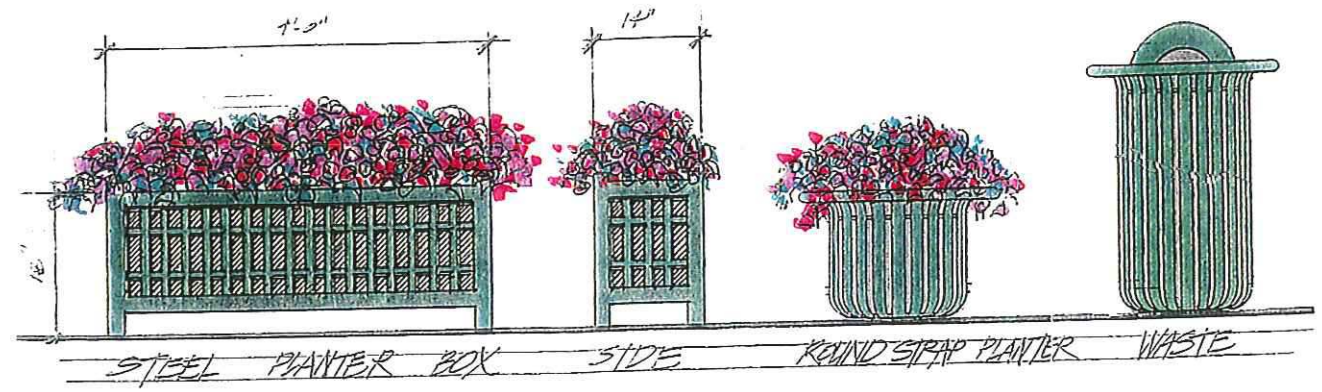

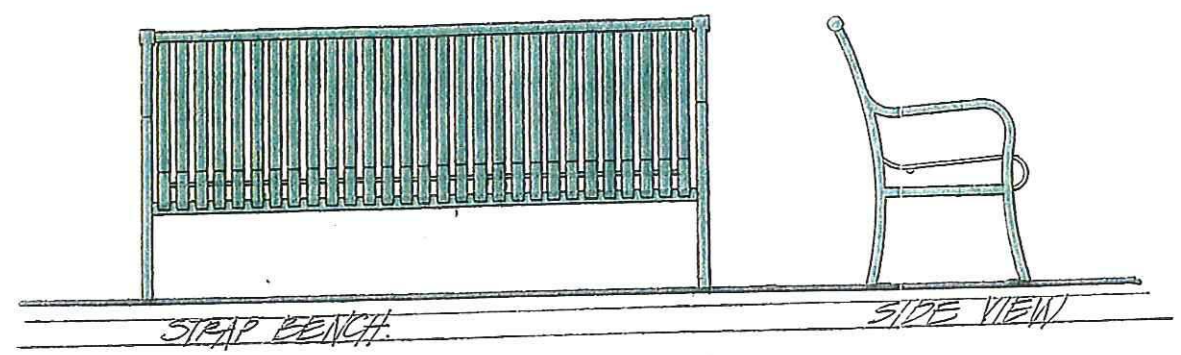

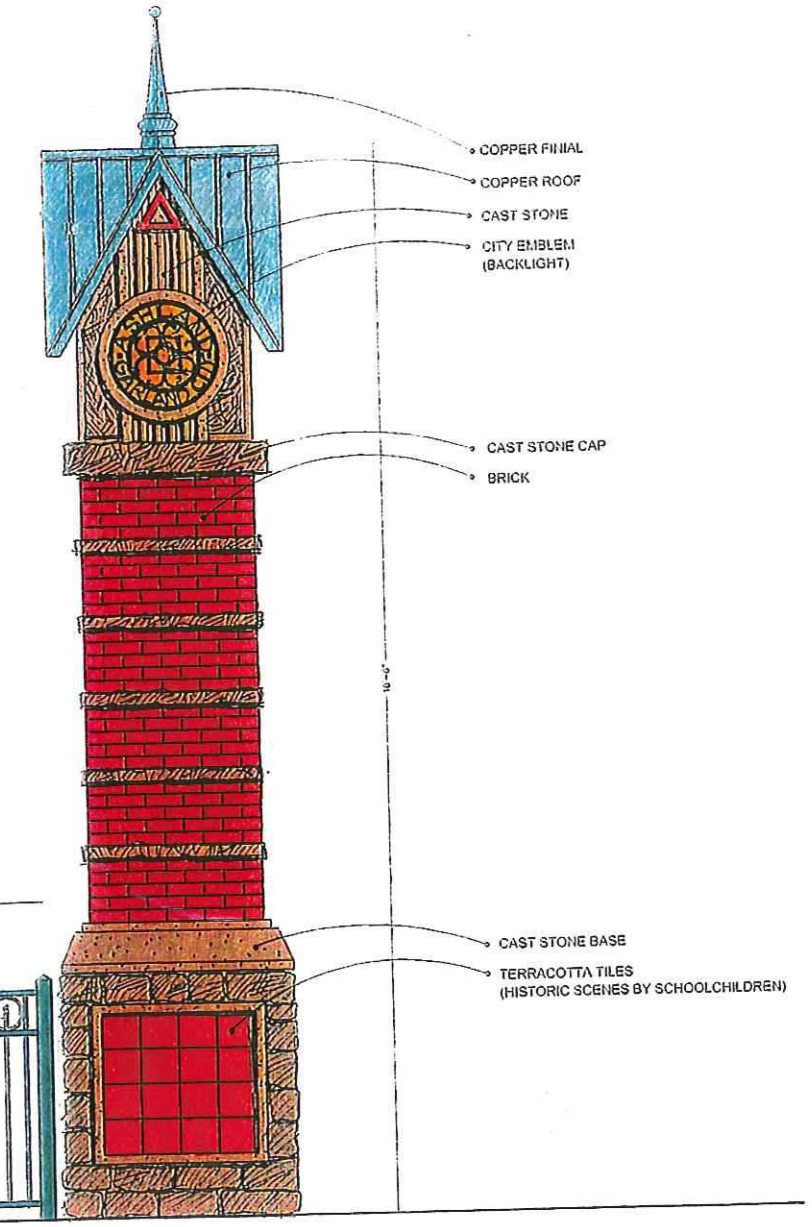

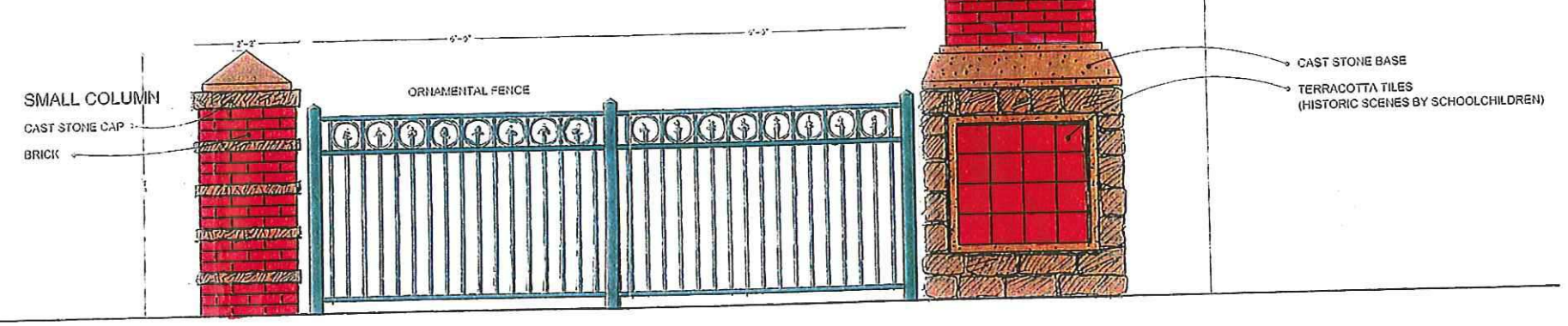

Ellis Avenue Redevelopment Project

Ashland, Wisconsin

RLK
RUDISTO LTD

6110 Blue Circle Dr.
Suite #100
Minnetonka, Mn.
55343

(612) 933-0972
Fax: (612) 933-1163

SANDERS
HACKER
GERDLY
INC.

LANDSCAPE
ARCHITECTS
AND
PLANNERS

353 East Kellogg Boulevard
Saint Paul, Minnesota 55101
Phone (612) 223-5425
Fax (612) 297-4317
E-mail: sahinc@uslink.net.com

Ref: 2022-179

COMMITTEE AGENDA: 6.C.
(10/11/2022)

SUBJECT: **Discussion and Possible Action Regarding Snow Removal around Fire Hydrants *(Councilor Seefeldt)***

RECOMMENDATION: Discussion and Possible Action

DEPARTMENT OF ORIGIN: Councilor Seefeldt

CLEARANCES: Council President

EXHIBITS:

SUMMARY STATEMENT:

After a brief discussion regarding snow removal throughout the City of Ashland during the September 27, 2022 Committee of the Whole meeting, other concerns have come up. In addition to snow removal along sidewalks, the question raised is;

What would it take for the City to return to keeping fire hydrants cleared City-wide?

Ref: 2022-192

COMMITTEE AGENDA: 6.D.
(10/11/2022)

SUBJECT: **Discussion and Possible Action Regarding Long Term Projection of Water & Wastewater Utility Rates *(Public Works)***

RECOMMENDATION: Discussion Only

DEPARTMENT OF ORIGIN: Public Works

CLEARANCES: City Administrator

EXHIBITS:

1.	Rate Increase Summary
2.	2023 Updated Preliminary Financial Projections, August 27, 2022
3.	Low Income Household Water Assistance Program (LIHWAP) Fact Sheet

SUMMARY STATEMENT:

The City of Ashland Water and Wastewater Utilities have deferred significant amounts of maintenance and asset replacement over time. This is best exemplified by the sewer overflows caused by infiltration and inflow (I&I) and the presence of 21 miles of pre-1900 cast iron water main out of a total of 60 miles.

Staff worked with Baker Tilly to analyze the impact on user rates as the City works to address these needs. This information is presented in detail in the attached memorandum from Baker Tilly staff. The preliminary analysis shows the need for a 31% rate increase for the Water Utility and a 21% rate increase for the Wastewater Utility by 2025. These rate increases are necessary to address anticipated increases in operating costs as well as debt service for necessary capital improvements.

These increases are not out of line with similar rate increases approved in 2022 by other Wisconsin communities, as shown in the attached summary.

Baker Tilly factored in assumptions as to how the City will benefit from the prioritization of low interest loans with principal forgiveness from the Wisconsin Department of Natural Resources (WI DNR) but will continue to work with City staff to minimize the extent of the rate increases through strategic "laddering" or timing of debt issuance, and by leveraging the longer payback period (30 yrs versus a stand 20-yr municipal note) available for pipeline projects through the WI NDR programs. Thus, Baker Tilly staff have labeled this analysis as the high end of actual user rate increases.

The Water Utility is regulated by the State of WI's Public Service Commission (PSC) and is required to obtain PSC approval for all rate increases. The PSC allows for both a rate case process and a simplified rate case (SRC). In order to move forward with a rate case, various layers of PSC approval of upcoming capital projects are necessary and the Water Utility is not yet ready to proceed. The SRC is essentially designed to allow utilities to keep up with inflation through a 3% increase in rates. For the Ashland Water Utility, operating expenses continue to rise each year while the amount of capital funds available limit the capital improvements that can be made. The rates currently administered by the Water Utility were implemented in 2016. As a result, staff have identified the SRC as a necessary step to move forward and have worked with Baker Tily staff to implement it.

The analysis from Baker Tilly is being shared with the Council to demonstrate the need for long term rate increases in order to meet strategic goals associated with infrastructure, along with the protection of public health, and to show that the SRC fits into the long term outlook of the Water Utility. Council approval is not required to move forward with the SRC but the Water Utility must provide public notification, so this discussion was scheduled for awareness.

The 3% increase will be applied to the 2023 Water Utility budget but publication after October 2022 would only allow the 3% increase to apply for a portion of the year.

The recent hiring of a full-time Utility Billing Specialist has allowed the Water Utility to provide additional services to residents, including enrollment in the Low Income Household Water Assistance Program (LIHWP). As explained in the attached fact sheet, the LIHWP assists low income households with past due bills for water and wastewater services. After enrolling in spring 2022, the Water Utility has assisted 24 residents with their delinquent bills through the LIHWP. The Public Works Director reports that modifications to the Safe Drinking Water Act and provisions of the Bipartisan Infrastructure Bill make specific accommodations for assistance to low income households. The additional staff time afforded by hiring a full-time Utility Billing Specialist will allow the Water Utility to continue to make use of these programs for the benefit of Ashland residents.

Municipality	Rate Increase	Additional Info Found
Park Falls	75%	Closure of Park Falls Paper Mill
Butler	46%	Increase in projects
Dorchester	36%	
Somers	36%	
Wauwatosa	30%	Wages, infastructure repairs, locates
Merrill	24%	Last CRC in 2013; SRCs in 2015, 2016, 2017, 2021
Madison	18%	Increase in operating costs
Uniton Grove	17%	First CRC since 2010
Schofield	5%	
Osseo	4%	
Pleasant Praire	4%	
Plymouth	3%	First increase in over 4 years

Memo

To: John Butler
Julie Vaillancourt

From: Nick Dragisich

Subject: 2023 Updated Preliminary Financial Projections

Date: August 27, 2022

I have updated the preliminary financial projections based on the most recent revised C.I.P. from the City. The financial projections for operating revenues and expenses are still based on the historical trends for each fund; however, the historical operating expenses have updated to reflect 2020 actual and 2021 actual expenses based on the information provided. The projected operating revenues for the Water Utility include anticipated increase sales volumes resulting from improved accuracy of the new water meters. The sales volume was increased by ten percent over the two- year period 2022 through 2023. This increase sales volume was also incorporated into the Wastewater revenues since billable volumes are based on water meter readings. The operating expenses for wastewater collection were reduced by $37,500 and wastewater treatment expenses were reduced by $35,710 in 2023 to reflect the cost savings resulting from a reduction in inflow and infiltration.

Capital expenses were based on my understanding and reading of the information. The capital improvements assumptions included:

- The funding source labeled “ACOE” for Water Utility projects in 2021, 2022, and 2024 was interpreted to mean Army Corps of Engineers and assumed to be grant funding
- The funding source “USDA” for the Water Utility project in 2021 in the amount of 95,751 for a Utility New Backhoe is a grant
- Projects funded with either SDWA or CWA loans where an amount of principal forgiveness was listed as a funding source have their loan repayment based on the total cost of each project less the principal forgiveness amount. For example, the CWA Loan for I & I Repairs Dist TBD in 2022 information indicated an amount of $2,4360,000 of which $750,000 would be in the form of “PF” or principal forgiveness so loan repayments were projected on the balance of $1,686,000 ($2,436,000 - $750,000 = $1,686,000).
- All loans and bonds were assumed to have a term of 20 years and an interest rate of 4.5%
- The Wastewater Replacement Account is $1,707,330
- Water and wastewater rates were not increased in 2022
- Existing debt coverage ratios of 1.25% for the Water Utility debt and 1.10 for the Sewer Utility debt were maintained
- The minimum ending cash balance for each fund was 90 days of operating expenses’ next year’s debt service, and the current Reserve or Replacement Account amounts.

The projections with the rate increases shown each year do fund all the anticipated capital improvements while meeting debt coverage requirements. The Water Utility Fund requires a 25% rate increase in 2023 to have positive operating income and meets to meet its minimum cash balance requirements for that year. Annual rate increases of 3% are required each year 2024 and 2025. The Wastewater Utility requires a 21% rate increase in 2023 to have positive operating income and to meet minimum cash balance requirements. No rate increases are required over the remaining planning period. This is primarily the

bakertilly
now, for tomorrow

result of the increased billing volumes from the new water meters and the reduction in operating costs from the reduction in inflow and infiltration.

The following pages show the C.I.P. and the financial projections. I can set up a Teams meeting to discuss them and any changes that would be needed. I assume the City did not increase rates for 2022 yet. We will need to talk about timing so the financial projections will more closely reflect the actual revenue streams.

DRAFT

bakertilly
now, for tomorrow

Preliminary C.I.P. Funding

Year	Project	Dept.	Water Utility Cash	ACOE	G.O. Water Revenue Bond	SDWA	Sanitary Sewer Utility Cash	G.O. Sewer Revenue Bonds	USDA Loan	USDA Grant	CWA Loans	SDWA/CWA Loans Principal Forgiveness	Totals
2021	Rehab Sanitary Sewers	Sewer Utility									1,170,615	750,000	1,920,615
2021	Pre Treatment Building & Electrical Upgrades	Sewer Utility					115,000						115,000
2021	Waterfront Access Road	Sewer Utility					175,000						175,000
2021	Water Intake replacement - Design	Water Utility	55,000	165,000									220,000
2021	New Meters	Water Utility	30,000										30,000
2021	Utility New Backhoe	Water Utility	7,266							95,751			103,017
2021	Water Storage Improvements	Water Utility	55,000										55,000
2021	Waterfront Access Road	Water Utility	250,000										250,000
2021 Total			**397,266**	**165,000**	**-**	**-**	**290,000**	**-**	**-**	**95,751**	**1,170,615**	**750,000**	**2,868,632**
2022	6th Street E. - 13th Avenue E. to 19th Ave E	Sewer Utility					250,000						250,000
2022	I & I repairs Dist TBD	Sewer Utility						-			1,686,000	750,000	2,436,000
2022	Water Metering System Upgrade	Sewer Utility					700,000						700,000
2022	6th Street E. - 13th Avenue E. to 19th Ave E	Water Utility	75,000										75,000
2022	Standpipe & Tower Coating	Water Utility			1,015,000								1,015,000
2022	Water Distribution System Upgrades	Water Utility	-		565,000								565,000
2022	Water Intake replacement - Construction	Water Utility		3,000,000	-	3,000,000						1,500,000	7,500,000
2022	Water Metering System Upgrade	Water Utility			700,000								700,000
2022 Total			**75,000**	**3,000,000**	**2,280,000**	**3,000,000**	**950,000**	**-**	**-**	**-**	**1,686,000**	**2,250,000**	**13,241,000**
2023	I & I repairs Dist TBD	Sewer Utility									1,250,000	750,000	2,000,000
2023	Main Lift Station	Sewer Utility									750,000	750,000	1,500,000
2023	Ore Dock Access Road	Sewer Utility					-	875,000					875,000
2023	Ore Dock Access Road	Water Utility	-	-		307,500						307,500	615,000
2023	MacArthur Ave Reconstruction	Water Utility									265,000	265,000	530,000
2023 Total			**-**	**-**	**-**	**307,500**	**-**	**875,000**	**-**	**-**	**2,265,000**	**2,072,500**	**5,520,000**
2024	WWTP Upgrades	Sewer Utility									1,750,000	750,000	2,500,000
2024	Sludge Press Rehab	Sewer Utility									300,000		300,000
2024	Prentice Ave 6th St E to 11th St E	Water Utility				250,000					200,000	200,000	650,000
2024	Water Plant Filter Replacement	Water Utility				250,000					-	250,000	500,000
2024	Ellis Ave Sewer Main Replacement	Sewer Utility									377,000		377,000
2024	Ellis Ave Water Main Replacement	Water Utility				450,000						450,000	900,000
2024 Total			**-**	**-**	**-**	**950,000**	**-**	**-**	**-**	**-**	**2,627,000**	**1,650,000**	**5,227,000**
2025	I & I repairs Dist TBD	Sewer Utility									750,000	750,000	1,500,000
2025	13th St E Reconstruction US2- 6th St E	Water Utility	250,000	750,000									1,000,000
2025	US 2 Water Main Replacement	Water Utility	-			300,000						300,000	600,000
2025	Chapple Avemue Reconstruction	Water Utility				215,000						215,000	430,000
2025 Total			**250,000**	**750,000**	**-**	**515,000**	**-**	**-**	**-**	**-**	**750,000**	**1,265,000**	**3,530,000**
Grand Total			**722,266**	**3,915,000**	**2,280,000**	**4,772,500**	**1,240,000**	**875,000**	**-**	**95,751**	**8,498,615**	**7,987,500**	**30,386,632**

DRAFT

Water Fund Projection

Projected Water Rate Adjustment	Calculate	0.00%	25.00%	3.00%	3.00%
	2021	2022	2023	2024	2025
Operating Revenues					
Residential Charges for Services	932,097	932,097	1,223,378	1,320,059	1,359,661
Commercial Charges for Services	434,291	434,291	570,007	615,053	633,505
Industrial	41,212	41,212	54,091	58,365	60,116
Public Authority	85,762	85,762	112,562	121,458	125,101
Multifamily	176,392	176,392	231,514	249,810	257,304
Other Revenue	674,001	674,001	842,502	867,777	893,810
Total Operating Revenue	**2,343,754**	**2,343,754**	**3,034,052**	**3,232,521**	**3,329,497**
Operating Expenses					
Source of Supply/Pumping	177,013	184,979	193,303	202,002	211,092
Water Treatment	212,379	214,503	216,648	218,814	221,002
Distribution Operation	109,567	114,497	119,650	125,034	130,661
Distribution Maintenance	174,147	175,889	177,647	179,424	181,218
Customer Accounts	79,205	80,789	82,405	84,053	85,734
Administrative & General	334,792	348,184	362,111	376,596	391,660
Existing Depreciation	485,153	460,895	437,850	415,958	395,160
New Depreciation	-	23,802	552,199	570,734	622,303
Total Operating Expenses	**1,572,256**	**1,603,537**	**2,141,813**	**2,172,614**	**2,238,829**
Operating Income (Loss)	**771,498**	**740,217**	**892,239**	**1,059,907**	**1,090,668**
Non Operating Revenues (Expenses)					
State or Federal Grants	-	4,500,000	572,500	900,000	1,265,000
Interest Income	5,818	9,991	12,900	16,792	20,995
Interest Expense Existing Debt	(140,771)	(136,368)	(131,031)	(125,333)	(119,237)
Interest Expense New Debt	-	-	(237,600)	(255,789)	(298,803)
Total Non Operating Revenues (Expenses)	**(130,369)**	**4,373,624**	**216,769**	**535,670**	**867,955**
Net Income (Loss) Before Transfers	**641,129**	**5,113,840**	**1,109,008**	**1,595,577**	**1,958,623**
Operating Transfers					
Transfers In	157,676				
Transfers (Out)	(479,052)	(458,224)	(687,208)	(782,669)	(873,062)
Total Operating Transfers	**(321,376)**	**(458,224)**	**(687,208)**	**(782,669)**	**(873,062)**
Net Income (Loss)	**319,753**	**4,655,617**	**421,800**	**812,908**	**1,085,560**
Beginning Cash & Investments	1,231,045	999,118	1,289,970	1,679,200	2,099,495
Net Income	319,753	4,655,617	421,800	812,908	1,085,560
Depreciation	485,153	484,697	990,049	986,692	1,017,463
Acquisition and Construction of Assets	(765,615)	(9,855,000)	(1,145,000)	(2,050,000)	(2,030,000)
Proceeds from New Long-Term Debt	-	5,280,000	572,500	1,150,000	515,000
Payments on New Long-Term Debt		-	(168,306)	(194,129)	(239,522)
Payments on Existing Long-Term Debt	(271,218)	(274,461)	(281,813)	(285,176)	(293,548)
Ending Cash Balance	**999,118**	**1,289,970**	**1,679,200**	**2,099,495**	**2,154,447**

DRAFT

Water Fund Projection (Continued)

Minimum Cash Balance	2021	2022	2023	2024	2025
For ongoing operations	393,064	400,884	535,453	543,154	559,707
Reserve Account	255,901	244,452	244,452	244,452	244,452
For debt service	410,828	818,750	860,427	951,111	991,520
Minimum Cash Balance Required	**1,059,793**	**1,464,087**	**1,640,332**	**1,738,717**	**1,795,679**
Amount Over (Under) Minimum	**(60,676)**	**(174,116)**	**38,868**	**360,778**	**358,768**
	2021	**2022**	**2023**	**2024**	**2025**
Days Cash	**335**	**421**	**532**	**646**	**644**
Debt Coverage Ratio	**3.06**	**3.01**	**2.31**	**2.40**	**2.24**
Debt/Operating Revenue	**0.18**	**0.18**	**0.27**	**0.27**	**0.29**
Operating Revenues/Operating Expenses	**1.49**	**1.46**	**1.42**	**1.49**	**1.49**

DRAFT

Wastewater Fund Projection

Projected Sewer Rate Adjustment	Calculate	0.00%	21.00%	0.00%	0.00%
	2021	2022	2023	2024	2025
Revenues					
Bulk Water Treatment	71,501	71,501	86,516	86,516	86,516
Metered Customer Revenues	2,034,536	2,034,536	2,584,877	2,707,918	2,707,918
Other Revenue	64,402	64,402	77,926	77,926	77,926
Total Operating Revenue	**2,170,438**	**2,170,438**	**2,749,320**	**2,872,360**	**2,872,360**
Operating Expenses					
Collection System	429,137	442,011	416,646	429,146	442,020
Wastewater Treatment	647,568	666,995	650,223	669,730	689,822
Customer Accounts	98,795	100,770	102,786	104,842	106,938
Administration & General	231,369	233,683	236,020	238,380	240,764
Existing Depreciation	843,245	817,948	793,409	769,607	746,519
New Depreciation		37,595	112,945	228,975	378,410
Total Operating Expenses	**2,250,113**	**2,299,002**	**2,312,030**	**2,440,679**	**2,604,473**
Operating Income (Loss)	**(79,675)**	**(128,564)**	**437,290**	**431,681**	**267,887**
Non Operating Revenues (Expenses)					
State or Federal Grants	-	750,000	1,500,000	750,000	750,000
Interest Income	7,228	22,312	18,265	28,548	37,589
Interest Expense Existing Debt	(38,278)	(37,619)	(35,546)	(33,416)	(31,227)
Interest Expense New Debt		(52,678)	(126,869)	(252,070)	(352,800)
Total Non Operating Revenues (Expenses)	**13,852**	**682,016**	**1,355,851**	**493,061**	**403,562**
Net Income (Loss) Before Transfers	**(65,823)**	**553,452**	**1,793,141**	**924,742**	**671,449**
Operating Transfers					
Transfers In	607,121				
Transfers (Out)	-				
Total Operating Transfers	**607,121**	**-**	**-**	**-**	**-**
Net Income (Loss)	**541,297**	**553,452**	**1,793,141**	**924,742**	**671,449**
Beginning Cash & Investments	3,527,712	2,231,178	1,826,538	2,854,788	3,758,926
Net Income	541,297	553,452	1,793,141	924,742	671,449
Depreciation	843,245	855,543	906,355	998,582	1,124,929
Amortization	-	-	-	-	-
Acquisition and Construction of Assets	(2,606,687)	(3,386,000)	(4,375,000)	(3,177,000)	(1,500,000)
Proceeds from New Long-Term Debt	-	1,686,000	2,875,000	2,427,000	750,000
Payments on New Long-Term Debt		(37,315)	(92,737)	(188,554)	(274,402)
Payments on Existing Long-Term Debt	(74,390)	(76,320)	(78,509)	(80,632)	(82,789)
Ending Cash Balance	**2,231,178**	**1,826,538**	**2,854,788**	**3,758,926**	**4,448,112**

DRAFT

Wastewater Fund Projection (Continued)

Minimum Cash Balance	2021	2022	2023	2024	2025
For ongoing operations	562,528	574,751	578,007	610,170	651,118
For debt service	53,855	333,660	554,673	741,219	798,920
Replacement Account	1,707,330	1,707,330	1,707,330	1,707,330	1,707,330
Minimum Cash Balance Required	**2,323,713**	**2,615,741**	**2,840,010**	**3,058,718**	**3,157,369**
Amount Over (Under) Minimum	(92,535)	(789,203)	14,778	700,207	1,290,744
	2021	**2022**	**2023**	**2024**	**2025**
Days Cash	**579**	**462**	**741**	**951**	**1,097**
Debt Coverage Ratio	**6.84**	**3.67**	**4.08**	**2.63**	**1.93**
Debt/Operating Revenue	**0.05**	**0.09**	**0.12**	**0.19**	**0.26**
Operating Revenues/Operating Expenses	**0.96**	**0.94**	**1.19**	**1.18**	**1.10**

DRAFT

Listen

LIHWAP Fact Sheet

FACT SHEET

LOW INCOME HOUSEHOLD WATER ASSISTANCE PROGRAM (LIHWAP)

Purpose:
To assist households with low incomes in paying arrearages (past due bills) and rates charged to the household for drinking water and/or wastewater services. The priority is to ensure that households whose services have been disconnected due to non-payment, or are about to be disconnected, are able to have their services restored as quickly as possible.

Legislative Authority:
Sec. 533 of the Departments of Labor, Health and Human Services, and Education, and Related Agencies Appropriations Act, 2021 (Division H of the Consolidated Appropriations Act, 2021), which became law on December 27, 2021 (Public Law 116-260).
Section 2912 of the American Rescue Plan Act, which became law on March 11, 2021 (Public Law 117-2).

Appropriations:
In FY 2021, $1.138 billion ($638 million from American Rescue Plan Act of 2021 and $500 million from Consolidated Appropriations Act, 2021)
Eligible Applicants:
States, the District of Columbia, the Commonwealth of Puerto Rico, U.S. territories (America Samoa, Guam, Northern Mariana Islands, and Virgin Islands), and federally and state-recognized tribes and tribal organizations that received FY 2021 Low Income Home Energy Assistance Program (LIHEAP) grants.

Target Population:
LIHWAP benefits target households with low incomes and that have the highest home water burdens, meaning they pay the greatest proportion (amount) of their income towards their home drinking water and/or wastewater services. Each grant recipient sets eligibility criteria for households, including a household income cutoff that is no more than the greater of 150% of the Federal Poverty Line (FPL) or 60% of State Median Income (SMI). Households will need to check with the state, territory, or tribe in which they live to confirm eligibility rules in their area.

Uses:
Grant recipients must use LIHWAP funding to:

- pay owners or operators of public water systems or treatment works to reduce arrearages of, and rates charged to, recipient households (approved for a benefit);
- cover the costs that grant recipients incur to administer the program; and,
- cover the costs of outreach and eligibility intake services.

Type of Grant:
Mandatory/Formula Grant, though not a Block Grant.

Program Requirements:
Prospective LIHWAP grant recipients were required to submit the following:

- Designation letters that identify the official who is empowered to administer the grant;
- Signed program Terms and Conditions;
- Signed Standard Form 424M (Standard Application Form for Federal Grant Funds); and
- LIHWAP Plan for administering the program.

LIHWAP Plans received public input at the grant recipient level regarding important program details, such as household eligibility criteria, benefit ranges, and related information.

Households interested in applying for program benefits must contact the agency in the state, territory, or tribe in which the household lives to obtain a program application. Federal program and grant recipient contact information can be found on the LIHWAP website under **LIHWAP Contact Information**.

Program Highlights:
LIHWAP is a new emergency program designed to assist households with paying for drinking water and/or wastewater services in response to needs precipitated by the COVID-19 pandemic. The program is modeled on LIHEAP but has its own unique characteristics.

Preliminary data indicates that during the first two quarters of Fiscal Year 2022 (October1, 2021- March 30, 2022):

- 41 states and over 56 tribes began accepting LIHWAP applications.
- Over 150,000 households received LIHWAP assistance.
- Over 91,000 households had services restored or disconnection prevented through LIHWAP benefits assistance.

Federal funding is available for use through September 30, 2023.

Program Contact:
Low Income Household Water Assistance Program
Division of Energy Assistance

Office of Community Services

Phone: (202) 401-9351

LIHWAP Staff Contacts

LIHWAP@acf.hhs.gov

www.acf.hhs.gov/ocs/programs/lihwap

Ref: 2022-2124

COMMITTEE AGENDA: 7. (10/11/2022)

SUBJECT: Items for Future Discussion

RECOMMENDATION: Recommendations only

DEPARTMENT OF ORIGIN: Council President

CLEARANCES:

EXHIBITS:

SUMMARY STATEMENT:

Below are topics brought forward during previous COW meetings not yet discussed, for consideration of potential future discussion:

- Ortman asked for a Women's Right to Choose resolution
- Ortman asked to address the decline in monarch butterflies, and asked how to become a "Monarch City"
- Seefeldt recommended the City address the speed limit, or noncompliance of, on USH 2 coming into town
- MacKenzie mentioned he would be bringing forward amendments to Chapter 467, Safety Zone in a Portion of Chequamegon Bay (near ore dock)