Find yourself next to the water.

ASHLAND

City of Ashland, Wisconsin
601 Main Street West — Ashland, WI 54806 — www.coawi.org

PLAN COMMISSION MEETING NOTICE

July 6, 2021 at 6:30PM

City Hall (601 Main St W) Council Chambers

AGENDA

1. Call to Order and Roll Call

2. Approval of the Agenda

3. Public Comment (non-agenda items)

4. Action Items:
   a. Review and Vote on a Request by James and Jacqueline Ogilvie to Vacate Two (2) Portions of Undeveloped Right-of-Way known as: That part of platted but not open 5th Avenue East adjacent to Lots 1 through 12 Block 379 and Lots 13 through 24 of Block 380 of Ellis Division, and also that part of platted but not open 5th Avenue East adjacent to Lot 7 of Block 17 of Superior Addition to the City of Ashland Wisconsin; and That part of platted but not open alleyway adjacent to Lots 5 through 12 and 16 through 24 of Block 380 of Ellis Division to the City of Ashland Wisconsin.

   b. Review and Vote on a Site Plan for construction of a new drive-thru food/beverage based use at 100 Stuntz Avenue, zoned City Center (CC) and Gateway-Overlay (GTWY-O). Applicant: Copper Cup

   c. Review and Vote on a Site Plan for construction of a new food based use at 22100 Lake Shore Drive East, zoned Regional Commercial (RC) and Gateway-Overlay (GTWY-O). Applicant: El Tarasco, LLC

5. Announcement/Reports/Comments/Questions

6. Adjournment

It is possible that a quorum of members of other governmental bodies of the municipality may be in attendance at the above stated meeting to gather information or speak about a subject, over which they have decision-making responsibility. Any governmental body at the above stated meeting will take no action other than the governmental body specifically referred to above in this notice. The City of Ashland does not discriminate on the basis of sex, race, creed, color, national origin, sexual orientation, age or disability in employment or provision of services, programs or activities. NOTE: Upon reasonable notice, the City of Ashland will accommodate the needs of disabled individuals through auxiliary aids or services. For additional information or to request this service, contact Megan McBride at (715) 682-7041.

Find yourself next to the water.

ASHLAND

City of Ashland, Wisconsin
601 Main Street West — Ashland, WI 54806 — www.coawi.org

DEPARTMENT OF PLANNING & DEVELOPMENT

601 Main Street West
Ashland, WI 54806
Phone: 715.682.7041

STAFF REPORT

Plan Commission – July 6, 2021

Agenda Item #5c: **Review and make a recommendation to council on the discontinuance of a portion of undeveloped right-of-way (ROW).**

Applicant: **John and Jacqueline Ogilvie**

Background

John and Jacqueline Ogilvie are requesting vacation of 2 portions of undeveloped right-of-way, one undeveloped alleyway and the other is the undeveloped portion of 5th Avenue East. The purpose for the request to vacate the alleyway is that it currently subdivides 2 properties which are both owned by the Ogilvie's, and they would like to legally combine as a single parcel. The request to vacate the undeveloped avenue east of their property is to allow them to make improvements to stabilize pre-existing the small drive in the right-of-way, in order to have the ability to more easily access the garden in their rear yard with vehicles and gardening equipment. They have agreed to an access easement if the requested right-of-way vacation is granted, allowing continued use by the public to ensure that this would not land lock any properties.

The Plan Commission should review this request based on the standards of review outlined in the below staff report, as well as Public Works staff input, to make a recommendation to City Council regarding the requested right-of-way vacation.

Standards for Review

Wisconsin State Statute 66.1003 DISCONTINUANCE OF A PUBLIC RIGHT OF WAY (all subsections thereof), create the legal framework to regulate, administer, and enforce the review and approval process for the City of Ashland.

Review

The following criteria were used to review the requested right-of-way discontinuance:

1. Future Public Work's Plans for Rights-of-Way. City staff has no plans for the development of this ROW, and Public Works expressed that they do not have

any concerns about the request. The applicant shall also provide an access easement to ensure that surrounding properties owners and farmers continue to have the ability to access their properties via this right-of-way.

2. Neighborhood Impact. The portion of undeveloped right-of-way requested for vacation does abut 2 other property owners, who will each need to provide written consent to the proposed vacation prior to the July 13, 2021 public hearing. The provision of an access easement will mitigate any potential negative neighborhood impacts created by this transition from public land to private property.

3. Public Comment. Wisconsin State Statute dictates the procedure for approval if any adjacent landowners are in opposition to the proposal. A Public Hearing will be held before the Common Council on July 13, 2021 and a Class III Public Hearing notice was issued to invite the public to provide input on this proposed discontinuance. Abutting property owners were also notified, and they must provide consent no later than the date of the public hearing.

4. Other Factors. N/A

Review Recommendation

Staff recommends APPROVAL of this requested discontinuance contingent on the following conditions:

- The applicant shall legally combine all contiguous property into a single parcel ID with the Ashland County Register of Deeds office

- The applicant shall prepare and file an access easement to allow continued use by property owners located south of the proposed vacation area.

Approvals are based on background information provided by the applicant and known conditions. Deviations from this information may be considered a change in the application and reconsideration and possible revision to the permit may be made by the Plan Commission.

201-02949-0000
ZORDAN
5TH AVE E
201-02948-0000
KONLINY
1500 PRENDICE AVE
16TH ST E
201-02956-0000
ENGHOLM TRUST
201-02957-1000
OGILVIE
420 16TH ST E
201-02957-0000
OGILVIE
201-02960-0000
CLARK
201-03989-0000
BOHATKA
201-03993-0000
PELTONEN
201-03987-0000
HARALAMBOUS
201-03992-0000
PELTONEN

Find yourself next to the water.

ASHLAND

City of Ashland, Wisconsin
601 Main Street West — Ashland, WI 54806 — www.coawi.org

DEPARTMENT OF PLANNING & DEVELOPMENT

601 Main Street West
Ashland, WI 54806

STAFF REPORT

Plan Commission – July 6, 2021

Agenda Item # 5b:	**Site Plan review for construction of a drive-thru coffee shop**
Applicant:	**Copper Cup**
Property Owner:	**Lucy Koivisto and Michael Tuttle**
Parcel No:	**201-01061-0000; 201-01406-0000**
Zoning District:	**City Center (CC), Gateway-Overlay (GTWY-O)**
Staff Contact:	**Megan McBride**

Background

Lucy Koivisto and Michael Tuttle, owners of Copper Cup, are requesting review and approval of the attached Site Plan for construction of a new drive-thru coffee shop at 100 Stuntz Avenue. The building and site have been designed to serve solely vehicle traffic at this time, with installation of a walk-up window on the northern side of the building as a possible future goal. The building will be 686sq ft in size, and be located on the northern portion of the site. Both ingress and egress driveways will connect to Stuntz Avenue, and a total of 10 off-street parking spaces for employees and order ahead customers will be provided on site.

Standards for Review

The City of Ashland's Unified Development Ordinance, Section 781 Section 3.20 Site Plan Approval (all subsections thereof), creates the legal framework to regulate, administer, and enforce the site plan review process for the City of Ashland.

Site Plan Review

The following criteria were used to review the submitted site plan:

1. Consistency with Comprehensive Plan.

The proposed development is consistent with the goals and principles established in the Comprehensive Plan, which recommends careful disposition of City-owned land, and for the City to work to put land back on the tax roll in ways that benefit the broader community. Drive-thru coffee shops can appeal to local workers, visitors and people who are traveling through Ashland along U.S. Highway 2. Additionally, this will provide another commercial option near the anticipated Oredock redevelopment area, providing mutual benefits as the Oredock upland area is redeveloped.

2. Project Compatibility.

The proposed development is compatible with the current and anticipated future uses in the area. Located on U.S. Highway 2, a drive-thru coffee shop is appropriate in this area and will add an additional commercial use along this primary corridor. This use will also be complementary to the anticipated future redevelopment of the Oredock upland area, which will likely include a mixture of commercial and residential uses.

3. Site Design

a. Site Organization.

The site organization has been designed to efficiently utilize this small, irregularly shaped lot for a successful commercial use. The site overall will be graded to direct stormwater away from the adjacent ravine and into on-site rain gardens, grassy areas, and private stormwater infrastructure. The property has also been designed to incorporate landscaping for screening of parking lots, and a rain garden is centrally located within the site design to provide stormwater management benefits and also beautification of the site.

b. Location of Buildings.

The only building on site has been oriented to efficiently utilize the lot, mitigate stormwater runoff created by the increase in impervious surface coverage, and to block views of the dumpster (which will also be surrounded by an enclosure to further screen public views). All three of these meet the intent and standards identified in the UDO for properties within the City Center (CC) and Gateway-Overlay (GTWY-O) zoning districts.

c. Drives, Parking, and Circulation.

Dimensions for all proposed parking and driveway areas conform to UDO standards.

- Driveway.
  The proposed driveways connect to Stuntz Avenue for one-way ingress and egress, and the proposed design has been reviewed and approved by the Public Works Department. The wide driveway to access the drive-thru window will allow traffic to pass on the right in order to access the three (3) take out spaces located in the northwestern area of the lot.

- Parking.
  Based on the Gross Floor Area of the proposed development, a maximum of 13 off-street parking spaces would be permitted. Therefore, the proposed number of 10 spaces meets UDO standards for the City Center zoning district. The parking spaces identified on the far southern portion of the property will provide landscaping to screen from the adjacent property, and will serve Copper Cup staff. The additional three (3) spaces located on the northwestern corner of the parking area

- Pedestrian Access.
  The business will be drive-thru only to begin with, with future plans to provide a walk-up window on the northern side of the building if possible.

a. Grading / Drainage / Stormwater.

- Erosion Control – Silt fencing will be utilized for erosion control during construction. The overall grading of the site has been oriented to build up the eastern side of the property to prevent any erosion or stormwater runoff from impacting the ravine.

- Stormwater/Drainage – Based on the area of land being disturbed for this development, review and permit issuance from the Wisconsin Department of Natural Resources (WDNR) will not be required since the land area disturbed will be less than one (1) acre. The developer shall be required to provide a private stormwater inlet structure on their property, and to ensure that stormwater runoff does not flow onto the public sidewalk.

b. Utility Services.

Water and sewer utility connections shall be made using existing Stuntz Avenue infrastructure, and shall require City Utility staff to perform this tap. The utilities plans provided have been reviewed and approved by the Public Works Department.

c. Fire Prevention.

The City requires a Knox Box on all new construction and rehabs if the business is not open 24-7. Following final design of the plans, the applicant shall provide a CD copy of the final Building Floor Plan Layout and Utility Plan (in a .dxf format), for the Fire Department's pre-fire planning of the structure's layout. Such information shall be provided to the Fire Department prior to the issuance of the Occupancy Permit.

d. Views.

The proposed development will not have a detrimental impact on any scenic vistas or view sheds.

e. Environmental Issues.

A Phase I Environmental Site Assessment (ESA) was performed on the site, and soil borings were taken to assess contamination levels for potential impacts on future development. The findings from this ESA and associated soil borings informed the site layout, but since no significant hot spots were identified there were no additional environmental requirements or stipulations associated with this development project.

f. Landscaping/Screening.

The proposed landscape plan exceeds UDO standards for required quantity of plantings based on the new impervious surface and building coverage being added to the property. Landscaping has been identified to provide screening for both parking areas, decorate the northern façade of the building facing U.S. Highway 2, and for beautification and functionality of the rain gardens.

g. Signs.

Any new signage will require a Sign Permit to be obtained through the Planning & Development Department to ensure it conforms to UDO standards.

h. Lighting.

Any proposed exterior lighting shall require the electrician to submit full exterior lighting plans to the Planning & Development Department for review to ensure it conforms to all UDO standards. All exterior lighting must be full cutoff.

4. Building Design.

The proposed building design meets all design standards identified in the UDO for the City Center (CC) zoning district. The exterior of the building will be made of wood or synthetic wood

vertically sided with battens, with natural wood accents to tie into the building's proximity to Lake Superior and location on a site formerly used by the railroad prior to City ownership.

5. Principles of Sustainability

Site features of this renovation/expansion that address principles of sustainability laid out in the UDO include:
- Straws and cups are compostable
- Order ahead options reduces typical idling time associated with a drive-thru use
- Utilize local products as much as possible
- Roast their own coffee beans and make their own caramel and vanilla syrups
- High efficiency LED light fixtures for exterior lighting

Review Recommendation

Staff recommends APPROVAL of the proposed site plan for the construction of a new drive-thru coffee shop at 100 Stuntz Avenue (parcel #'s 201-01061-0000 and 201-01406-0000), subject to the following conditions:

- Applicant shall combine parcels into a single parcel ID with the Ashland County Register of Deeds office
- Applicant shall provide full utilities plan to the Public Works Department for final review and approval
- Applicant shall provide specs for proposed exterior lighting to ensure they comply with UDO standards
- Contact Utility to schedule water/sewer connections, mains to be tapped by Utility employees
- Existing storm inlet at the corner of Stuntz Avenue and U.S. Highway 2 does not have a storm inlet, developer must provide their own inlet structure on private property which can then connect to the existing inlet box
- Rip/rap area must be located on private property, and shall not be placed in the public right-of-way

MI **Copper Cup** LLC
Your Daily Conductor

Site Plan Review – Cover Letter

June 21, 2021

City of Ashland
601 Main Street West
Ashland, WI
54806

Re: Development of Stuntz and US Highway 2 in Ashland, WI

Dear Ashland Plan Commission,

The purpose of this letter is to describe our Site Plan Review request.

General Description of Proposed Project:

- The Copper Coffee coffee drive-thru plan has evolved as we have met requirements for right-of-ways and other zoning requirements. Due to the little space we have to work with along Stuntz, we will no longer have a walk-up order window. However, we can accommodate order-ahead parking spaces instead.
- In our Ironwood location, we have 9 employees and we need 5 parking spaces. Because of the assumed higher need, the 6 parking spaces will be put along our Main Street corner (SE Corner) so that our employees do not have to depend on street parking, especially during inclement weather. Having our own parking will ensure our staff will be out of the way for snow plow trucks and it will allow us to put lights above the parking for their safety.

Proposed Phasing (Pending approvals & permits)

- June 2021: Overgrown Shrub Removal & Trash Pick Up
- July 2021: Grading, Site Prep, Construction Entrance/Curb Cuts, Water Service Connections, & Wastewater Service Connection, Temporary Sign
- August 2021: Building Construction
- September 2021: Paving & Stormwater
- November 2021: Furniture, Fixtures, & Finishes
- January 2022: Business Opens

Sincerely,

Lucy Koivisto
Owner

Michael Tuttle
Owner

Mailing Address
PO Box 445
Ironwood, MI 49938

(906) 285-7451
micoppercup@gmail.com
www.micoppercup.com

Physical Address
517 E. Cloverland Drive
Ironwood, MI 49938

Locally Owned & Operated | Woman-Owned | Native American-Owned

ASHLAND

City of Ashland, Wisconsin
601 Main Street West — Ashland, WI 54806 — www.coawi.org

CITY OF ASHLAND

SITE PLAN CHECKLIST

1. Completed Site Plan Review Application form with completed and signed checklist.

   ☑ *Attached*

2. A cover letter is required describing the request for the Site Plan Review. The letter shall include a general description of the proposed project. Describe the proposed phasing of all buildings and site improvements including utilities, streets, and storm-water facilities.

   ☑ *Attached*

3. Provide evidence of ownership or an interest in the property if purchased within the past six months. If applicant is different from property owner, written permission from the property owner is required prior to Site Plan approval.

   ☑ *Attached* ☐ *Does Not Apply* Deed

4. **Site Plan**. All new development requires that a professionally drawn and stamped site plan be submitted, drawn to scale not more than 100 feet to the inch, and includes the following items:

   A. The name, address, and telephone number of the owner, developer and designer.
   B. Legal description of the site.
   C. The location and dimensions of all site property lines and adjacent parcel lines within 100 feet.
   D. Show and label all proposed and required front, rear, and side yard setbacks of the new development to the adjacent property lines.
   E. Show the location and label widths of all existing and proposed public rights-of-way and public easements adjacent to and within the site.
   F. Show all existing and proposed street improvements including streets, alleys, curbs, sidewalks and trails. Identify connections to existing/proposed sidewalks and trails and label proposed bicycle facilities and widths of pedestrian facilities.
   G. Show existing and proposed driveways, parking spaces, and loading spaces. Indicate the direction of travel for one-way drives and inside radii for all curves. Note dimensions of driveways and parking spaces and list total number of parking spaces required and provided. Provide cross-section drawings of proposed curbs and sidewalks. Identify areas for snow storage/stacking.
   H. Show the size, shape, location, height, and floor area of all existing and proposed new structures, and main and basement floor grades.
   I. Existing and proposed grades, drainage systems, and structures with topographic contours at intervals not exceeding 2 feet.
   J. Show any natural features such as wooded lots, mature vegetation, wetlands, floodplains, drainage ways, streams, and lakes or ponds with indication as to which are to be retained and which are to be removed or altered.
   K. Show all existing and proposed new sign locations (approximate, if unknown at this time) for the site.
   L. Show all existing and/or proposed septic systems, drain fields, tanks and wells if applicable.
   M. Provide any additional site information as required by the Zoning Administrator or Designated Authorized Agent or the Plan Commission.

   ☐ *Attached* ☐ *Does Not Apply, Please state reason:*

5. **Vicinity Plan.** Show the location of the site in relation to the street system and neighborhoods. Label the land uses and ownership of adjacent properties.

   ☐ *Attached* ☑ *Does Not Apply, Please state reason:*

12. **Erosion and Sediment Control Plan.** Prepare a plan that meets the performance standards and additional information as described in *Part 8: Section 8.2 of the Unified Development Ordinance 781,* and addresses pollution caused by soil erosion and sedimentation during construction and up to final stabilization of the site.

☑ *Attached* ☐ *Does Not Apply via Section 8.2: A 4 b of the Unified Development Ordinance 781*

13. **Storm Water Management Plan.** Prepare a plan that meets the performance standards and additional information as described in *Part 8: Section 8.3 of the Unified Development Ordinance 781.*

☑ *Attached* ☐ *Does Not Apply via Part 8: Section 8.3: A 4 b of the Unified Development Ordinance 781*

14. **Sustainability Consideration.** Provide information addressing the recommendations as described in *Part 1: Section 1.4 Integration of Principles of Sustainability, in the Unified Development Ordinance 781.*

15. **Additional Information** – Provide phasing plan, economic impact statement, and all other information as determined by the Plan Commission or City staff to establish compliance with *Section 3.20 of the Unified Development Ordinance 781* and other applicable City ordinances.

All information listed above is attached to this application unless otherwise marked "Does Not Apply." I understand that incomplete submittals may delay the processing of the application. I will apply separately for all proposed new signage, if applicable.

Applicant Signature	Printed Name & Title	Date
[signature]	Michael L Tuttle Owner	6/28/2021

Property Owner Signature	Printed Name	Date
[signature]	Lucy Koivistu	6/28/21

The completed documents have been received by:

City of Ashland Authorized Staff Member	Date
[signature]	7/1/21

Site Plan

Our site plan will be used exclusively as the reference for the development of (TBA) 100 Stuntz Ave.

Vicinity Plan

Based on our previous approval by the Ashland planning commission for the construction of Copper Cup Ashland, a vicinity plan is not included in this application. We are located at the northern end of the City Center zoning district which is comprised of mainly commercial business to the south, along main street and Highway 2. The Ore Dock Development zone is across highway 2 towards the lake. Primarily residential and a couple small parks encompass the site on the eastern side for several blocks. The mixed zoning that surrounds the location paired with easy access off Highway 2 creates a diverse group of potential coffee loving patrons.

Utilities Plan

The number of employees is projected to be 16 to 20. Four full time and 12 to 16 part time. The daily water usage was projected at 20% more than our current location, resulting in an estimated usage of 344 gallons daily. I have requested for a 1-inch service line and a ¾ inch meter which will provide adequate pressure for all systems within.

The public utilities will be run perpendicular to Stuntz Ave to the building location. Water is in the street requiring a 12-inch saddle. Sewer is close to the sidewalk with a modern 8-inch PVC main. Excel energy has not yet responded to the location of a service connection point for electrical or natural gas. Our plan is to go underground with electrical service if possible. Natural gas and telecommunications will most likely be directionally drilled post construction.

The current storm water drain on Stuntz Ave will be impacted slightly. The grading and landscaping of the site is designed to not retain any stormwater. Grading will prevent water from running into the ravine to the north. Paved area runoff aside from the entrance and exit will have a minimum of 23-feet of grass to cross before reaching the sidewalk, which has an additional 6-feet of grass on the other side.

Fire Protection Plan

Copper Cup will provide the Ashland fire department with detailed drawings of site and building. We are currently seeking requirements from the Wisconsin health department to determine hood type, if required for our facility. Fire protection and prevention systems will meet all state and local codes to provide a safe environment for both employees and patrons.

Landscaping, Buffers, Screenings

Landscaping is designed to be aesthetically pleasing, purposely useful to absorb stormwater, low maintenance, and environmentally stable for years to come. The ravine to the north will remain wooded. Current design calls for 12 shrubs, 4 Deciduous, 1 Coniferous, and 1 Rain Garden to be added. All surrounded by a buffer area of grass extending to the sidewalk. We are currently seeking input from local master gardeners to determine the best vegetative species to plant that are native to the area and good for pollinators. Lucy completed a master gardener class in Iron County and plans to use her resources to make educated decisions on the species to be planted.

The six parking spaces on the eastern edge of the site will be adequately screened by existing trees along with the addition of four trees south of the spaces. Dumpsters on site will be screened with a wooden fence painted to compliment the building.

External Lighting Plan

We at Copper Cup believe that quality well lit outdoor areas are paramount for employee safety. In the winter months especially when employees will be arriving and departing long before and after daylight hours. The exterior of the building will be well lit with soffit lighting. This lighting will be high efficiency LED using less than 5 watts per lineal foot. Parking areas and drives will be lit with high quality dusk to dawn solar powered lights. These poles will conform to the Accessory Structures ordinance being less than 20ft in height and aesthetically complementing the buildings appearance. A minimum of 4 security cameras will be on the exterior of the building, sight lines to be determined later. Side notes our current location has 4 external cameras and a live cam of Highway 2 in

Ironwood. This is useful for a quick check of road conditions and our recordings have been useful to local law enforcement in solving several crimes, including the return of a stolen vehicle.

Fencing Plan

No fencing plan will be included in this application as the only fence will be a screening around the dumpsters.

Architectural Plans

The architectural plans for Copper Cup Ashland are evolving almost daily as we seek the most efficient, ergonomic flow for the baristas that will be operating the facility. We have settled on the footprint that we are presenting with this application; however internal design of kitchen area is continually evolving. The exterior of the building will be of wood or synthetic wood vertically sided with battens. Natural wood accents on the corners, gables, and corbels above the order and pickup window eves. The color of the exterior is a dark grey with a darker trim color. See attached Photo. Windows will be black aluminum and fixtures will be black iron in appearance with copper highlights of course. This style will match our new re-branding and our coffee bags.

Erosion and Sediment Control Plan

One of our core values of Copper Cup Ashland is operating in an environmentally friendly manner. It is of our intent, that during construction through completion, to capture any sediment that may try to wash off-site, with the implementation of silt fencing surrounding the disturbed areas (noted on site Plan) and all along the northeastern property line. Immediately following grading vegetative erosion control will be put into place. Grading, digging in utilities, gravel asphalt base, curbing, and foundation is planned be performed nearly simultaneously. Areas outside this will be seeded as soon as possible to prevent erosion.

Storm Water Management Plan

Our storm water management plan will rely on existing storm drain located on Stuntz Ave. Parking lots and drives equal 14,998 sq/ft of impervious surface. The roof of the building accounts for an additional 1,122, sq/ft of surface area. Small portions of this area will be naturally channeled towards Stuntz Ave. The majority

of storm water will flow to vegetative areas or rain gardens. Grading elevations on the site lead to a high building location with runoff flowing to the southwest, west and eventually to a heavily rip rapped area near the northern corner of the property. The grading high point will be along the ravine of the developed area, lending the rest of the site to gently slope towards Stunts Ave and Hwy2 at two to three percent grade. The large buffer of vegetative area all greater than 23 ft around the impervious surfaces in combination with the removal of curbing promotes absorption and prevents retention.

Sustainability Consideration

Sustainability is a big word for me; however, it is key to survival of a small business. Providing fast and friendly service that is ultimately the goal. To get that service we recruit personality and pay our employees well. We are non-discriminating and promote financial and social equality. Maintaining those relationships formed with the customers is sustainability. By showing that we respect the environment we offer things like straw less lids, taking one item out of the waste stream. Our straws and paper cups are compostable. Ashland location will have order ahead options. This will decrease idle time waiting in line for all customers reducing the consumption of fossil fuels. Parking areas will use solar powered lights that are efficient and reliable, reducing energy consumption.

Additionally, to combat unfair trades with coffee farmers and operation delays too frequently out of our control we decided to roast our own coffee beans. Michael gutted and rebuilt a building for our coffee roaster and we are beginning to finalize our own coffee roast profiles to share with the world. Throughout COVID-19, we experience frequent delays in shipment and made last minute trips to Duluth for supplies and coffee beans. Like many businesses, there are supplies that we rely to heavy on to keep risking our supplies – coffee being the main one. Roasting our own beans allows us to share our artisan heart and love for the cycle of the coffee plant while also implementing responsibly sources methods of green coffee beans and paying farmers fairly. It also allows us to reliably keep our main item on the shelf, coffee! Coffee beans will be available for sale then at our drive-thrus, farmers markets and also online! The drive-thru and farmer's markets will have an option to refill their beans in glass jars (e.g., mason jars) to reduce waste.

Our dairy products are produced in Wisconsin currently. We have called and contacted every dairy within 2 hours of Ironwood and not one delivers to our area. We have identified one dairy near Ashland that would be closer for that location to carry milk. Carrying more local dairy would be such a big goal for us to reach and reduce fuel use.

We hope to add some local food options to our menu at the Ashland location and have made contact with several already, including purchasing micro-greens from small farms.

Throughout COVID-19 we also experienced severe delays in our syrups. It pushed us to get started on our homemade syrups sooner so we were grateful for that push. We now make 24 bottles of caramel and 24 bottles of vanilla in our small drive thru, we expect that to increase quite a bit in Ashland. We also hope to continue perfecting our recipes for other flavored syrups.

We have had to request more recycling bins in Ironwood since we opened and will continue to recycle what we can in Ashland. We went from 1 recycle bin when we opened, emptied once a week, to 3 recycle bins emptied 2 times a week. Though our waste has increased because we have gotten so busy, we are still capturing all the recycling we can. In Ashland, we will have a dumpster dedicated to recycling.

The Ashland location is centrally located in Ashland, along a main route for transit. So we also anticipate being easily accessible for many potential employees to walk to or to use BART.

We like to embody the spirit that comes with living in the Northwoods and that is to be part of the community and put ourselves out there for charitable events. We currently give more to programs that provide for those who cannot speak for themselves, including foster children, other children in need, domestic violence shelters, orphaned pets, and the elderly. We hosted a "Sponsor a Local Community Senior" for Valentine's Day in 2021, with the support of Ashland's Superior Floral & Gift, and managed to deliver flowers, cards, and candy to ALL residents of our 4 local nursing homes (197 residents). We provide free drink cards during the holidays to all foster parents in Gogebic County. Lucy, Michael and their son also open on Christmas Day for working first responders to come

through, and we deliver drinks that day to the ambulance station, Aspirus Emergency Room, HOPE Animal Shelter, and DOVE (domestic violence shelter).

We have our big dream of starting a full non-profit from a margin of our coffee business and we have even begun the process of buying our website and establishing that 501(c)3. We are not looking at short term impacts to our community along the Superior shoreline, instead, we are hoping to use this business as a steady base to support programs in our community.

Contacts

Owners: MI Copper Cup LLC

Michael Tuttle 360 298 8443 Lucy Koivisto 906 285 0007

Design Architect: D.C.H. Design

Dennis Hewitt 906 364 1578

Contractor Grading / Utilities: Ruotsala Construction

Jason Ruotsala 906 932 0300

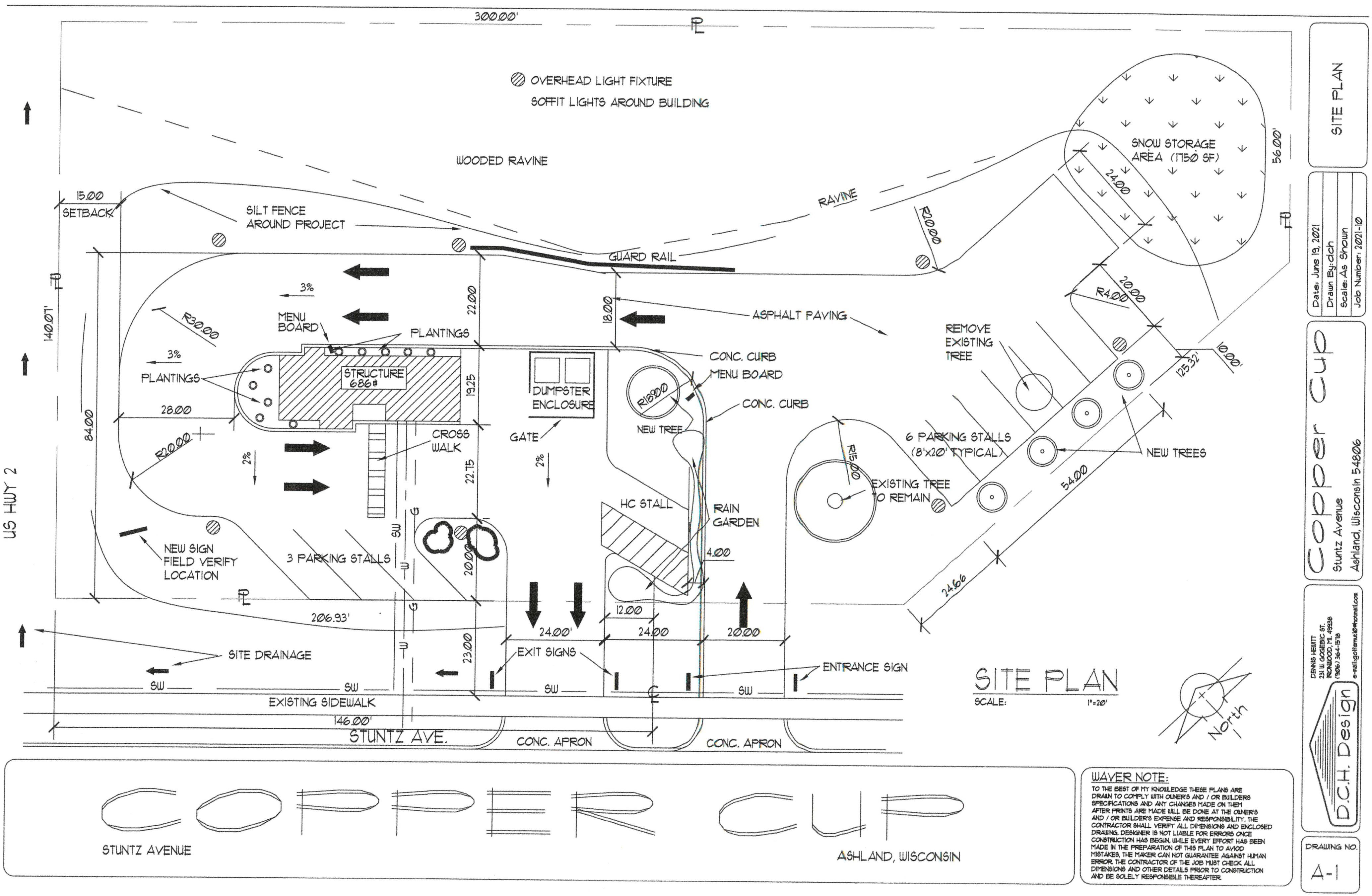
300.00'
OVERHEAD LIGHT FIXTURE
SOFFIT LIGHTS AROUND BUILDING
WOODED RAVINE
RAVINE
SNOW STORAGE AREA (1750 SF)
56.00'
24.00
R20.00
15.00
SETBACK
SILT FENCE AROUND PROJECT
GUARD RAIL
140.01'
22.00
18.00
3%
R30.00
MENU BOARD
PLANTINGS
ASPHALT PAVING
R4.00
20.00
CONC. CURB
MENU BOARD
REMOVE EXISTING TREE
10.00'
125.32'
PLANTINGS
STRUCTURE 686#
19.25
DUMPSTER ENCLOSURE
R18.00
NEW TREE
CONC. CURB
28.00
84.00
R20.00
CROSS WALK
GATE
2%
22.75
R15.00
6 PARKING STALLS (8'x20' TYPICAL)
NEW TREES
EXISTING TREE TO REMAIN
54.00
US HWY 2
HC STALL
RAIN GARDEN
4.00
NEW SIGN FIELD VERIFY LOCATION
3 PARKING STALLS
20.00
24.66
206.93'
12.00
24.00'
24.00
20.00
23.00
SITE DRAINAGE
EXIT SIGNS
ENTRANCE SIGN
SITE PLAN
SCALE: 1"=20'
SW
EXISTING SIDEWALK
146.00'
STUNTZ AVE.
CONC. APRON
CONC. APRON
North
COPPER CUP
STUNTZ AVENUE
ASHLAND, WISCONSIN
WAVER NOTE:
TO THE BEST OF MY KNOWLEDGE THESE PLANS ARE DRAWN TO COMPLY WITH OWNER'S AND / OR BUILDERS SPECIFICATIONS AND ANY CHANGES MADE ON THEM AFTER PRINTS ARE MADE WILL BE DONE AT THE OWNER'S AND / OR BUILDER'S EXPENSE AND RESPONSIBILITY. THE CONTRACTOR SHALL VERIFY ALL DIMENSIONS AND ENCLOSED DRAWING. DESIGNER IS NOT LIABLE FOR ERRORS ONCE CONSTRUCTION HAS BEGUN. WHILE EVERY EFFORT HAS BEEN MADE IN THE PREPARATION OF THIS PLAN TO AVIOD MISTAKES, THE MAKER CAN NOT GUARANTEE AGAINST HUMAN ERROR. THE CONTRACTOR OF THE JOB MUST CHECK ALL DIMENSIONS AND OTHER DETAILS PRIOR TO CONSTRUCTION AND BE SOLELY RESPONSIBLE THEREAFTER.
SITE PLAN
Date: June 19, 2021
Drawn By: dch
Scale: As Shown
Job Number: 2021-10
Copper Cup
Stuntz Avenue
Ashland, Wisconsin 54806
DENNIS HEWITT
231 W. GOGEBIC ST.
IRONWOOD, MI. 49938
(906) 364-1518
e-mail:golfemut10@hotmail.com
D.C.H. Design
DRAWING NO.
A-1

Find yourself next to the water.

ASHLAND

City of Ashland, Wisconsin
601 Main Street West — Ashland, WI 54806 — www.coawi.org

DEPARTMENT OF PLANNING & DEVELOPMENT

601 Main Street West
Ashland, WI 54806

STAFF REPORT

Plan Commission – July 6, 2021

Agenda Item # 5c:	**Site Plan review for construction of a restaurant**
Applicant:	**El Tarasco, LLC**
Property Owner:	**City of Ashland (until land transfer)**
Parcel No:	**201-03611-0200**
Zoning District:	**Regional Commercial (RC), Gateway-Overlay (GTWY-O)**
Staff Contact:	**Megan McBride**

Background

El Tarasco, LLC is requesting approval of a site plan for construction of a Mexican restaurant on the northern portion of the Timeless Timber site, identified as Parcel A of Lot 1 in the attached map. The City solicited proposals for redevelopment of the Timeless Timber site as two separate Requests for Proposals (RFPs), seeking commercial redevelopment of the northern approximately 4.75 acres of the site and residential development for the remaining property area. The commercial proposal submitted by El Tarasco, LLC was selected by City Council, and a Development Agreement was approved on April 20, 2021.

The building will be 5,258 sq ft in size, with a main dining room (seating for 82), a private dining and conference room (seating for 24), and a bar area (23 seating, with additional standing room). Additionally, there will be an attached outdoor covered patio dining area with seating for 36. This will generate approximately 20 new jobs, 12 full-time and 8 part-time. Additionally, this property is located within the community's distressed Tax Incremental District #9, so the tax revenue generated from this development would create both short- and long-term financial benefits for the City of Ashland, Ashland County, Ashland School District, and WITC.

Standards for Review

The City of Ashland's Unified Development Ordinance, Section 781 Section 3.20 Site Plan Approval (all subsections thereof), creates the legal framework to regulate, administer, and enforce the site plan review process for the City of Ashland.

Site Plan Review

The following criteria were used to review the submitted site plan:

1. Consistency with Comprehensive Plan.

The proposed development is consistent with the goals and principles established in the Comprehensive Plan, which specifically recommends careful disposition of City-owned land

such as the Timeless Timber site. This development meets numerous other Comp Plan goals, including promotion of quality of life, tourism, and amenities which also appeal to young families. Outdoor seating is also an attractive experience for both locals and visitors, and the private party/conference space identified can serve a wide range of community members.

2. Project Compatibility.

The proposed new restaurant is compatible with the surrounding uses, and its location within the City's Regional Commercial (RC) zoning district, and along the U.S. Highway 2 commercial corridor. The U.S. Highway 2 center turn lane that serves Kwik Trip will be extended by the developer to 23rd Avenue East per DOT requirements, which will promote safety and efficiency of traffic for this commercial use.

3. Site Design

a. Site Organization.

The organization of buildings, driveways, parking areas, open spaces, outdoor kennels, landscaping, and other site features has been arranged to achieve a functional, safe, and harmonious site relationship. The parking area has been oriented to primarily be located behind and to the side of the principal building, as is recommended for the Gateway-Overlay district. The building and outdoor seating areas have been arranged such that they are attractive to customers entering from the parking lot, while also adding to the aesthetics of this highly visible regional commercial corridor.

b. Location of Buildings.

The proposed location of the building complies with all required setbacks, and is oriented to focus attention on the principal building with the parking area, dumpster and outdoor walk-in cooler concealed and screened from views. It is also located towards the northern area of the site, to leave room for future commercial development of Parcel B as identified in the attached map. This future development on the southern portion of the site (between the new restaurant and residential development) will need preliminary plans within 3 years, and construction to begin within 5 years of construction of the restaurant.

c. Drives, Parking, and Circulation.
Dimensions for all proposed parking and driveway areas conform to UDO standards.

- Driveway.
The proposed driveway for ingress and egress from 23rd Avenue East have been reviewed by the Public Works Department, who approves contingent on the developer preserve existing asphalt on 23rd Avenue East as part of the curb cut for the driveway, with no saw-cut permitted. Otherwise, the right-of-way connection locations have been approved, and will facilitate efficient use of their parking lot in conjunction with the extension of the center turn-lane to serve 23rd Avenue East as part of this construction project.

- Parking.
The maximum number of parking spaces allowed is based on 1 space per 75sq ft of Gross Floor Area (GFA). Based on the size of the indoor and outdoor seating areas, the total number of spaces allowed would be 84. Therefore, the proposed number of parking spaces (81) is below the maximum number of spaces allowed. The required minimum 10% of parking area includes landscaping islands as

indicated on the landscape plan. Required ADA compliant spaces have been indicated on the site plan. The bicycle parking requirement has also been indicated on the west side of the parking area located in front of the building.

- Pedestrian Access.
  All proposed sidewalks comply with City and ADA requirements. The developer shall also install sidewalks on each side of their property, with extension of the public sidewalk to the west side of 22nd Avenue East with curb ramp and signage indicating "sidewalk ends" per the Manual of Uniform Traffic Control Devices. The expansion of public sidewalk through this development will also help facilitate pedestrian connectivity with the future residential development on the southern portion of the site.

a. Grading / Drainage / Stormwater.

- Erosion Control/Grading – Silt fencing will be utilized for erosion control during construction.
- Stormwater/Drainage – Based on the area of land being disturbed for this development, review and permit issuance from the Wisconsin Department of Natural Resources (WDNR) will be required. Copies of WDNR approvals shall be submitted to the Planning & Development Department prior to Building Permit issuance.

b. Utility Services.

All water, sewer and stormwater infrastructure work shall be done to City standards, and the new water connection shall be made using a wet tap so as not to disrupt water service to surrounding properties. The sanitary main in the public right-of-way shall be 8 inch minimum to comply with NR 110. The contractor shall contact the City Utility to schedule water/sewer connections, which will be tapped by Utility employees.

c. Fire Prevention.

The building will be fully sprinklered per state building code standards. The City requires a Knox Box on all new construction and rehabs if the business is not open 24-7. Following final design of the plans, the applicant shall provide a CD copy of the final Building Floor Plan Layout and Utility Plan (in a .dxf format), for the Fire Department's pre-fire planning of the structure's layout. Such information shall be provided to the Fire Department prior to the issuance of the Occupancy Permit.

d. Views.

The proposed development will not have a detrimental impact on any scenic vistas or view sheds. The site plan does include a significant area of outdoor seating, which may have some lake views, and generally will take advantage of the property's proximity to Lake Superior and the Waterfront Trial.

e. Environmental Issues.

The City of Ashland completed Phase I and Phase II Environmental Site Assessments, as well as a post-demolition site assessment after demolition of the former Timeless Timber building. Additionally, the City completed wetland delineation of the site and successfully obtained approvals by the Wisconsin Department of Natural Resources and Army Corps of Engineers for exemption from wetland permitting and mitigation requirements. Therefore, the property is shovel ready for the selected commercial development.

f. Landscaping/Screening.

A final landscaping plan shall be submitted to the Planning Department that conforms to UDO standards and addresses the requirement identified in the Development Agreement to incorporate green infrastructure into the site design. Landscaping is proposed to screen views of the parking area, as well as headlights for surrounding properties. Within the parking area, two (2) islands have been identified on the site plan to meet the minimum 10% requirement of landscaping of the parking area. The developer shall be required to install street trees in the boulevard in front of their development, which should also be included in a final landscape plan to be submitted to the Planning Department for final review and approval.

g. Signs.

Any new signage will require a Sign Permit to be obtained through the Planning & Development Department to ensure it conforms to UDO standards.

h. Lighting.

Any proposed exterior lighting shall require the electrician to submit full exterior lighting plans to the Planning & Development Department for review to ensure it conforms to all UDO standards. All exterior lighting must be full cutoff.

4. Building Design.

The proposed building design meets all design standards identified in the UDO for the Regional Commercial (RC) district as well as Gateway-Overlay (GTWY-O) district. “The building will be one story, steel framed and have a Spanish style adobe look exterior using E.I.F.S (exterior Insulation finishing system).” The building interior has been designed to accommodate a mixture of uses and customers, including the outdoor seating area, a private room which can be reserved for parties, meetings, or conferences, in addition to the sit-down restaurant and bar seating areas available.

5. Principles of Sustainability

Site features of this renovation/expansion that address principles of sustainability laid out in the UDO include:

- Native plantings, trees, a rain garden, and a stormwater retention pond will be utilized to help promote stormwater management best practices and incorporate green infrastructure throughout the site. The final landscaping plan will need to be submitted to the Planning Department for review and approval.

- High efficiency, LED exterior lighting which shall be reviewed and approved through the Exterior Lighting plan

Review Recommendation

Staff recommends APPROVAL of the proposed site plan for the proposed construction of a new restaurant at 2210 Lake Shore Drive East, subject to the following conditions:

- Applicant shall submit a final landscaping plan for review and approval by the Planning Director prior to Building Permit issuance

- Applicant shall provide proof of DNR stormwater permit approval

- Applicant shall submit a final exterior lighting plan for review and approval by the Planning Director prior to Building Permit issuance

- Applicant shall contact the Utility to schedule water and sewer connections, and shall perform the water connection as a wet tap to avoid service disruption to other properties.

DESIGN & ENGINEERING
with framework design inc

2023 6th Street West, Ashland, WI 54806 Phone: (715) 682-0330 www.csdesignengineering.com

June 16, 2021

Megan McBride, Director of Planning & Development
City of Ashland
601 Main Street West
Ashland, WI 54806

RE: El Tarasco Restaurant - Site Plan Review

Dear Megan,

Attached please find the Site Plan Review Application & Checklist, and Plan Set for the proposed new restaurant to be constructed at 2200 Lake Shore Drive East. This fully sprinklered building will be approximately 5,258 sq. ft. including a main dining room (seating for 82), a private dining and conference room (seating for 24), and a bar area (23 seating, with additional standing room). Additionally, there will be an attached outdoor covered patio dining area with seating for 36. It is our hope that construction will begin later this summer / fall. We realize that there are some outstanding items on the checklist, and they will be submitted as required prior to permitting. It is our hope that the general concept is approved by the Planning Commission.

The building will be one story, steel framed and have a Spanish style adobe look exterior using E.I.F.S (exterior Insulation finishing system). Most of the roof will be a low slope roof covered in E.P.D.M. membrane and will house the mechanical equipment. The main entry piece of the structure will have a Spanish tile style metal roofing. The patio seating area will be covered with a wood pergola frame covered by clear polycarbonate building panels. An exterior lighting plan will be submitted to the City when completed.

We are proposing an exterior walk-in cooler and dumpster enclosure location on the east end of the building. Both will be screened behind an 8' high block wall that will be finished to match and blend in with the building elevations.

The site has been surveyed and a wetlands delineation has been completed previously by the City of Ashland. Stormwater runoff, grading & all DNR stormwater drawings are completed and have been submitted to the City of Ashland. A state building and plumbing plan review and approval and required DNR permits will be completed before construction begins.

An 81-spot paved parking lot will be constructed on the south, west and east sides of the building. On the east side of the building will be a delivery area for the kitchen. A new driveway connection to 23rd Avenue East will be constructed. We are in the planning stages for the landscaping that will provide a visual barrier around the north, west and east sides of the parking lot to screen it from the

adjacent roads and neighborhood. A final landscaping plan will be submitted to the City when completed.

We have been are working with the City of Ashland public works department on the water connection on 23rd Ave East and sewer connections to the mains on 22nd Ave East. The sanitary main will need to be cut across 22nd Ave, and the road repaired after it is installed. Xcel Energy has been contacted regarding the natural gas and electrical services; there will be a new electrical transformer on the east end of the dumpster enclosure.

A freestanding sign is proposed to be located on the north side of the parking area. This will be addressed in a future approval process with the City.

Please review the attached documents at your earliest convenience and place as an agenda item on the June 22nd, 2021 Planning Commission meeting. If there are any questions or additional information required, please let us know.

Sincerely,

Amber Ericksen

Amber Ericksen, Architect
C&S Design & Engineering, Inc.

Cc:
Jose Alvarez, owner

PROPOSED CONSTRUCTION FOR:

EL TARASCO RESTAURANT

2200 LAKE SHORE DRIVE EAST
ASHLAND, WI 54806

PROJECT NUMBER: 20-3419

PROJECT TEAM

OWNER:	JOSE ALVAREZ ASHLAND AREA DEVELOPMENT ASHLAND, WI 54806
ARCHITECT:	C&S DESIGN & ENGINEERING, INC. 2023 6th STREET WEST ASHLAND, WI 54806 P: 715-682-0330
STRUCTURAL ENGINEER:	AMI CONSULTING ENGINEERS, PA 91 MAIN STREET SUPERIOR, WI 54880 P: 715-718-2193
CIVIL ENGINEER:	AMI CONSULTING ENGINEERS, PA 91 MAIN STREET SUPERIOR, WI 54880 P: 715-718-2193
PLUMBING DESIGNER:	PEARSON KENT MCKINLEY RAAF ENGINEERS 13300 W. 98TH STREET LENEXA, KS 66215 P: 913-492-2400
HVAC ENGINEER:	PEARSON KENT MCKINLEY RAAF ENGINEERS 13300 W. 98TH STREET LENEXA, KS 66215 P: 913-492-2400
ELECTRICAL:	PEARSON KENT MCKINLEY RAAF ENGINEERS 13300 W. 98TH STREET LENEXA, KS 66215 P: 913-492-2400

SYMBOLS

1	KEY NOTE
3:12	ROOF SLOPE & DIRECTION
H	WINDOW TAG
100	DOOR TAG
SLOPE:	SLOPE OF SLAB
A D # A## B C	INTERIOR ELEVATION TAG
+1"	STEP/ELEVATION CHANGE
T.O. SLAB 106'-0"	ELEVATION MARKER
A	WALL TYPE (SEE PLAN OR LEGEND FOR ADD. INFO)
12 4	ROOF SLOPE
1.0	GRID LINE
1 A200	BUILDING ELEVATION
1 A300	BUILDING SECTION
1 A401	WALL SECTION
1 A400	DETAIL/ENLARGED PLAN CALLOUT
1 A500	DETAIL CALLOUT

PROJECT DATA

PROJECT NAME:	EL TARASCO RESTAURANT
PROJECT ADDRESS:	2200 LAKE SHORE DRIVE EAST ASHLAND, WI 54806
OWNER:	JOSE ALVAREZ
PARCEL NUMBERS:	201-03611-0200
LEGAL DESCRIPTION:	LOT 2 CERTIFIED SURVEY 670 INCLUDING VAC ALLEY ADJ 29.27AS. NOTE: DESCRIPTION TO CHANGE AFTER TRANSFER OF THE PROPERTY OWNERSHIP FROM THE CITY OF ASHLAND
LAND AREA:	4+ ACRES
ZONING DISTRICT:	RC - REGIONAL COMMERCIAL
GOVERNING CODES:	2015 INTL BUILDING CODE 2015 INTL ENERGY CONSERVATION CODE 2015 INTL FUEL GAS CODE 2015 INTL MECHANICAL CODE ANSI A117.1-2009 ACCESSIBILITY CODE WISCONSIN PLUMBING CODE
OCCUPANCY GROUP:	A-2
CONST TYPE:	VB
BLD GROSS AREA:	BUILDING AREA = 5,258 SF COVERED PATIO = 768 SF TOTAL = 6,026 SF
BLD VOLUME:	OVER 50,000 CF YES ☒ NO ☐
# OF STORIES:	1 STORY
ALLOWABLE AREA:	24,000 SF / STORY (SPRINKLERED)
ALLOWED STORIES:	2 STORY
SPRINKLERED:	YES ☒ NO ☐
FIRE ALARM SYS:	YES ☐ NO ☒
OCCUPANT LOAD:	251 TOTAL OCCUPANTS (SEE LIFE SAFETY PLAN FOR CALC.)
EXITS REQ'D:	2 EXITS
EXIT TRAVEL MAX:	250 FEET
PLUMBING FIXTURES:	SEE LIFE SAFETY PLAN

GENERAL NOTES

1. THE CONTRACTORS ARE TO KEEP A SET OF STATE APPROVED PLANS AT THE JOB SITE AT ALL TIMES.
2. A PRE-CONSTRUCTION CONFERENCE WILL BE HELD WITH THE CONTRACTORS BEFORE ANY WORK COMMENCES.
3. ALL WORK IS TO BE PERFORMED IN ACCORDANCE WITH THE STATE BUILDING, PLUMBING, ELECTRICAL, AND HVAC CODE CURRENTLY IN EFFECT.
4. ALL STATE AND LOCAL BUILDING PERMITS WILL BE OBTAINED BY THE OWNER AND MUST BE POSTED AT THE JOB SITE BY THE CONTRACTOR, U.N.O.
5. THE GENERAL CONTRACTOR IS RESPONSIBLE FOR CHECKING ALL CONTRACT DOCUMENTS FOR THEIR ACCURACY AND CONFIRMING THAT WORK IS BUILDABLE AS SHOWN BEFORE PROCEEDING WITH CONSTRUCTION. IF THERE ARE ANY QUESTIONS REGARDING THESE, OR OTHER COORDINATION QUESTIONS, THE CONTRACTOR IS RESPONSIBLE FOR OBTAINING CLARIFICATION FROM THE ARCHITECT BEFORE PROCEEDING WITH THE WORK IN QUESTION OR RELATED WORK.
6. THE OWNER SHALL INDEMNIFY AND HOLD HARMLESS THE DESIGN PROFESSIONAL FROM ANY CLAIM OR SUIT WHATSOEVER ARISING FROM, OR ALLEGED TO HAVE ARISEN FROM, THE CONTRACTOR'S PERFORMANCE OR THE FAILURE OF THE CONTRACTOR'S WORK TO CONFORM TO THE DESIGN INTENT OF THE CONTRACT DOCUMENTS.
7. THE WORK UNDER THE CONTRACT SHALL INCLUDE ALL LABOR, MATERIALS, TOOLS, FEES, INSURANCE, TAXES, ETC. FOR GENERAL CONSTRUCTION, INCLUDING MECHANICAL, PLUMBING AND ELECTRICAL CONSTRUCTION, AS APPLICABLE, FOR THE COMPLETE CONSTRUCTION OF THIS PROJECT.
8. ALL PRODUCTS AND MANUFACTURERS OF MATERIALS/FINISHES/ETC PER ARCHITECTURAL DRAWINGS OR SPECIFICATION. SUBSTITUTIONS OF EQUAL QUALITY AND PERFORMANCE PERMITTED AS APPROVED BY DESIGN PROFESSIONAL IN CHARGE.
9. ALL MATERIALS, SUPPLIES, AND EQUIPMENT SHALL BE INSTALLED AS PER MANUF. SPECIFICATIONS AND AS PER LOCAL CODES AND REQUIREMENTS, LOCATED PER PLAN
10. THE CONTRACTOR MUST VERIFY ALL EXISTING CONDITIONS AT THE JOB SITE.
11. THE DESIGN PROFESSIONAL WILL NOT HAVE CONTROL OVER, OR CHARGE OF, AND WILL NOT BE RESPONSIBLE FOR THE CONSTRUCTION MEANS, METHODS, SEQUENCE OR PROCEDURES IN REGARDS TO THE MANNER IN WHICH THE STRUCTURE IS BUILT.
12. ALL PROPERTY LINES ARE ASSUMED UNLESS A CERTIFIED SURVEY MAP HAS BEEN PROVIDED FOR THE PROPERTY.
13. ALL BUILDING SETBACKS ARE MEASURED FROM THE EAVE LINE OF THE BUILDING.
14. THE CONTRACTOR IS TO HAVE ALL THE UTILITY LINES VERIFIED BY THE APPROPRIATE UTILITY LOCATING SERVICE. THE CONTRACTOR SHALL BE RESPONSIBLE TO HAVE A LOCATE DONE PRIOR TO BREAKING OF GROUND.
15. THE CONTRACTOR SHALL BE AWARE OF ALL PRIVATE UTILITIES LOCATIONS SUCH AS WATER, SEWER, AND GAS.
16. ALL DAMAGE TO EXISTING DRIVEWAYS, ROADWAYS, STREETS, CONCRETE SIDEWALKS, LAWNS, ETC. MUST BE RESTORED TO THE CONDITION THEY WERE BEFORE CONSTRUCTION COMMENCED.
17. PROVIDE A MINIMUM OF 2% DRAINAGE SLOPE AWAY FROM THE ENTIRE PERIMETER OF THE BUILDING FOR THE FIRST 20 FEET, U.N.O.
18. THE GENERAL CONTRACTOR SHALL BE SOLELY RESPONSIBLE FOR THE DESIGN, ADEQUACY, AND SAFETY OF ERECTING BRACING, SHORING AND TEMPORARY SUPPORTS, ETC. THE GENERAL CONTRACTOR IS RESPONSIBLE FOR THE STABILITY OF THE STRUCTURE PRIOR TO THE APPLICATION OF ALL SHEAR WALLS, ROOF SHEATHING, STRUCTURAL ELEMENTS AND FINISH MATERIALS.
19. THE GENERAL CONTRACTOR SHALL PERFORM HIGH QUALITY PROFESSIONAL WORK; JOIN MATERIALS TO UNIFORM, ACCURATE FITS SO THAT THEY MEET WITH NEAT, STRAIGHT LINES, FREE OF SMEARS OR OVERLAPS; INSTALL EXPOSED MATERIALS APPROPRIATELY LEVEL, PLUMB AND AT ACCURATE RIGHT ANGLES OR FLUSH WITH ADJOINING MATERIALS. WORK OF EACH TRADE SHALL MEET ALL NATIONAL STANDARDS PUBLISHED BY THAT TRADE, EXCEPT IN THE CASE WHERE THE CONTRACT DOCUMENTS ARE MORE STRINGENT.
20. ALL EXISTING BUILDING DIMENSIONS MUST BE FIELD VERIFIED.
21. WRITTEN DIMENSIONS TO PREVAIL OVER SCALING OF DRAWINGS. CONTRACTOR(S) TO VERIFY ALL DIMENSIONS PRIOR TO CONSTRUCTION AND IMMEDIATELY NOTIFY DESIGNER OF ANY DISCREPANCIES.
22. ALL DIMENSIONS TO FACE OF STUD OR CONCRETE WALLS, U.N.O
23. SEE SITE PLAN FOR NOTES AND DIMENSIONS NOT SHOWN.
24. SEE ELEVATIONS, INTERIOR ELEVATIONS AND FINISH SCHEDULE FOR MATERIALS NOT CALLED OUT.
25. IF APPLICABLE, THE FIRE RATING OF WALLS AND CEILINGS MUST BE MAINTAINED BEHIND ALL INSTALLED FIXTURES (BATH UNITS, VANITIES, CEILING FANS, ELECTRICAL BOXES, EXHAUST FANS, ETC.
26. THE CONTRACTOR SHALL TAKE ABSOLUTE CARE TO PROTECT NEWLY INSTALLED MATERIALS, MILLWORK, BUILT-INS AND FINISHES.
27. THE CONTRACTOR SHALL PROVIDE ALL OPERATING AND MAINTENANCE DATA AND ALL MANUFACTURER'S, INSTALLER'S AND APPLICATOR'S GUARANTEES, BONDS, WARRANTIES AND SERVICE INSTRUCTIONS.
28. CONFIRM WINDOW OR DOOR NUMBER WITH MFR. AND SITE CONDITIONS. ALL OPERABLE WINDOWS AND DOORS SHALL HAVE REMOVABLE SCREENS.
29. CONTRACTOR TO VERIFY R.O. REQUIREMENTS FOR WINDOWS & EXTERIOR DOORS WITH WINDOW MANUFACTURER PRIOR TO ORDERING
30. REFERENCE ELEVATIONS AND/OR BUILDING SECTIONS FOR WINDOW OPERATIONS.
31. REFER TO ENGINEERED TRUSS DRAWINGS, IF APPLICABLE, FOR PLACEMENT OF TRUSS COMPONENTS. CONTRACTOR IS TO FIELD VERIFY ALL TRUSS DIMENSIONS BEFORE PRODUCTION OF TRUSSES.
32. ALL GAS PIPING INSTALLATIONS SHALL COMPLY WITH NFPA 54-2015, NATIONAL FUEL GAS CODE.

INDEX TO DRAWINGS

ATS	TITLE SHEET
LS100	LIFE SAFETY PLAN
L100	SITE AND LANDSCAPING PLAN
A100	FLOOR PLAN
A101	REFLECTED CEILING PLAN
A102	ROOF PLAN
A200	ELEVATIONS
A201	MODEL VIEWS
A300	CROSS SECTIONS
A400	INTERIOR ELEVATIONS
A401	INTERIOR ELEVATIONS
A500	WALL SECTIONS
A501	WALL SECTIONS
A600	SCHEDULES

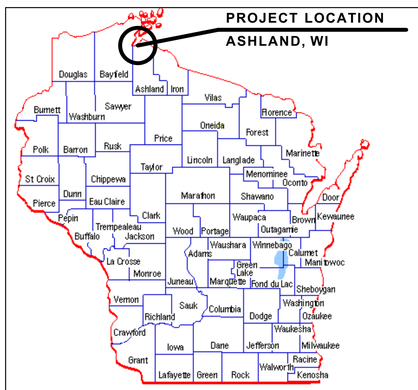

STANDARD ABBREVIATIONS

ABOVE FINISH FLOOR	A.F.F.	CONTRACTOR	CONTR.	FIRE EXTINGUISHER	F.E.	JANITOR	JAN.	OVERFLOW DRAIN	O.F.D.	STEEL	STL.
ACOUSTICAL CEILING TILE	ACT.	CONTROL JOINT	C.J.	FIRE EXTINGUISHER CABINET	F.E.C.	JOINT	JT.			STORAGE	STOR.
ADDITIONAL	ADD.	COURSES	CRS.	FIRE RATED	FR.	JOIST	JST	PAINT	PT.	STREET	ST.
ADJUSTABLE	ADJ.	CUBIC FOOT(AGE)	CF	FIXTURE	FIX.			PAINTED	PTD.	STRUCTURAL	STRUCT.
ALIGN WITH BELOW	A.W.B.			FLASHING	FLASH'G	LAMINATED	LAM.	PANEL	PNL.	SUSPEND (ED)	SUSP. (D)
ALTERNATE	ALT.	DETAIL	DET.	FLOOR	FLR.	LAVATORY	LAV.	PARTITION	PTN.		
ALUMINUM	ALUM.	DIAMETER	DIA.	FLOORING	FLR'G	LEVEL	LVL.	PERFORATED	PERF.	TELEPHONE	TEL.
AMERICAN DISABILITIES ACT	ADA	DIMENSION	DIM.	FLOOR PLAN	F.P.	LIGHTING	LTG.	PLASTIC LAMINATE	PLAM.	THERMOPLASTIC POLYOLEFIN	TPO
APPROXIMATELY	APPROX.	DISPENSER	DISP	FOOTING	FTG.	LINE	LN.	PLATE	PL.	THICKNESS	THK.
		DOOR	DR	FOUNDATION	FDNT.	LINOLEUM	LINO.	POLYVINYL CHLORIDE	PVC	TOP OF	T.O.
BASEMENT	BSMT.	DOWN	DN.	FLUORESCENT	FLUOR	LONG LEG HORIZONTAL	LLH	POUNDS PER SQUARE INCH	PSI	TOP OF CONCRETE	T.O.C.
BEAM	BM.	DOWNSPOUT	DS.			LONG LEG VERTICAL	LLV	PRESERVATIVE TREATED	P.T.	TOP OF FOOTING	T.O.F.
BELOW	BELW.	DRAWING (S)	DWG. (S)	GALVANIZED	GALV.	LOW POINT	L.P.	PROPERTY	PROP.	TOP OF RAIL	T.O.R.
BITUMINOUS	BIT.	DRINKING FOUNTAIN	D.F.	GAUGE	GA.					TOP OF STEEL	T.O.S.
BLOCK	BLK.			GENERAL CONTRACTOR	G.C.	MANUFACTURER	MFR.	QUANTITY	QTY.	TOP OF WALL	T.O.W.
BLOCKING	BLKG.	EACH	EA.	GLASS	GL.	MASONRY	MAS.	QUARRY TILE	Q.T.	TREAD	T.
BOARD	BD.	ELECTRICAL	ELEC.	GYPSUM	GYP.	MASONRY OPENING	M.O.			TREATED	TRT
BOTTOM	BOT.	ELEVATION	ELEV.	GYPSUM WALLBOARD	GWB.	MATERIAL	MAT.	RADIUS	R.	TRENCH DRAIN	T.D.
BOTTOM OF	B.O.	ELEVATOR	EL.			MAXIMUM	MAX.	REINFORCING	REINF.	TYPICAL	TYP.
BRICK COURSE	B.C.	ENCLOSURE	ENCL.	HANDICAP ACCESSIBLE	H.C.	MECHANICAL	MECH.	REQUIRED	REQ'D.		
BUILDING	BLDG.	EQUAL	EQ.	HARDWARE	HDW.	MEMBRANE	MEMB.	RESILIENT FLOORING	RSL.	UNDERWRITERS	U.L.
BUILT-UP ROOFING	B.U.R.	EQUIPMENT	EQUIP.	HEATER	HTR.	METAL	MTL.	RETURN AIR	R.A.	LABORATORIES	
		EXHAUST	EXH.	HEATING, VENTING, AND	HVAC	MINIMUM	MIN.	REVISION	REV.	UNLESS NOTED OTHERWISE	U.N.O.
CARPET	CPT.	EXISTING	EXIST.	AIR CONDITIONING		MISCELLANEOUS	MISC.	RISER	R.		
CAST-IN-PLACE	C.I.P.	EXPANSION	EXP.	HEIGHT	HGT.	MOUNTED	MTD.	ROOF DRAIN	R.D.	VENEER PLASTER	V.P.
CAST IRON	C.I.	EXPANSION JOINT	E.J.	HIGH POINT	H.P.	NON-COMBUSTIBLE	NC.	ROOM	RM.	VERIFY IN FIELD	V.I.F.
CATCH BASIN	C.B.	EXPOSED	EXP.	HOLLOW CORE	H.C.	NOT APPLICABLE	N.A.	ROUGH OPENING	R.O.	VERTICAL	VERT.
CEILING	CLG.	EXTERIOR	EXT.	HOLLOW METAL	H.M.	NOT IN CONTRACT	N.I.C.	RUBBER	RUBR.	VINYL COMPOSITION TILE	VCT.
CEMENT	CEM.			HORIZONTAL	HORIZ.	NOT TO SCALE	N.T.S.			VINYL WALL COVERING	VWC.
CENTER LINE	CL	FACE OF	F.O.	HOUR	HR.	NUMBER	NO.	SECTION	SEC.		
CERAMIC TILE	C.T.	FACE OF CONCRETE	F.O.C.					SHEET	SHT.	WATER CLOSET	W.C.
CLEARANCE	CLR.	FACE OF FINISH	F.O.F.	INCANDESCENT	INCAN.	OCCUPANT / OCCUPANCY	OCC.	SIMILAR	SIM.	WATERPROOFING	W.P.
CLOSET	CLO.	FACE OF MASONRY	F.O.M.	INCH	IN.	ON CENTER	O.C.	SOLID CORE	S.C.	WELDED WIRE FABRIC	W.W.F.
COLUMN	COL.	FEET	FT.	INCLUDING	INCL	OPENING	OPNG.	SPECIFICATIONS	SPEC.	WIDE FLANGE	W.F.
CONCRETE	CONC.	FINISH	FIN.	INSIDE DIAMETER	I.D.	OPPOSITE	OPP.	SQUARE	SQ.	WINDOW	WDW.
CONCRETE MASONRY UNIT	CMU	FINISH FLOOR ELEVATION	F.F.E.	INSULATION	INS.	OPPOSITE HAND	O.H.	SQUARE FOOT(AGE)	SF	WITH	W/
CONSTRUCTION	CONST.	FINISH GRADE	F.G.	INTERIOR	INT.	OUTSIDE DIAMETER	O.D.	STAINLESS STEEL	SSTL.	WITHOUT	W/O
CONTINUOUS	CONT.	FINISH SURFACE	F.S.					STANDARD	STD.	WOOD	WD.

PROPOSED CONSTRUCTION FOR:
EL TARASCO RESTAURANT
2200 LAKE SHORE DRIVE EAST, ASHLAND, WI 54806

TITLE PAGE

DESIGN & ENGINEERING
C&S with framework design inc
2023 6th Street West, Ashland, WI 54806
Telephone (715) 682-0330 www.csdesignengineering.com

DESIGNED: A.D.E.
DRAWN: A.D.E.
SCALE: AS NOTED
DATE: JUNE 2021
PROJECT NO. 20-3419

REVISIONS:
21-03-03: DD SET COMPLETE

APPROVED:
NOT FOR CONSTRUCTION OR FINAL PRICING

SHEET NO.
ATS

© Copyright 2020 C&S Design & Engineering, Inc. all rights reserved. Any use without permission is expressly prohibited. Plotted 6/14/2021 4:20 PM

SITE INFORMATION:
ZONING DISTRICT: RC, REGIONAL COMMERCIAL

BUILDING:
BUILDING AREA: 5,258 SQ. FT.
COVERED PATIO: 768 SQ. FT.

SITE INFORMATION:
PROPERTY AREA: APPROX. 206,910 SQ. FT. (4.75 ACRES)

SETBACKS:
FRONT PARCEL LINE: 15 FT.
ROAD SIDE SETBACK: 30 FT.
REAR PARCEL LINE:

PROPOSED BUILDING
TOTAL BUILDING ROOF AREA ON SITE: 6,176 SQ. FT.

DRIVEWAYS & PARKING SPACES
TOTAL PAVED AREA: 45,694 SQ.FT.

SIDEWALK AREA: 3,142 SQ. FT.

TOTAL IMPERVIOUS AREA ON SITE: 55,012 SQ. FT.
TOTAL IMPERVIOUS COVERAGE OF SITE: APPROX. 27%
BUILDING COVERAGE OF THE SITE: APPROX. 3%

SITE LIGHTING:
PARKING AREA ON SITE WILL BE ILLUMINATED WITH FREESTANDING POLE LIGHTS . THE LIGHTS WILL BE FULL CUT OFF AND ON POLES LESS THAN 20 FEET HIGH.
THE BUILDING WILL HAVE WALL LIGHT FIXTURES THAT ARE SHIELDED FROM NEIGHBORING PROPERTIES EITHER BY LOCATION ON THE BUILDINGS, OR WILL BE FULL CUT OFF TYPE FIXTURE.

LANDSCAPING REQUIREMENTS: TBD

4 / L100 **SITE NOTES**
SCALE: 1' = 1'-0"

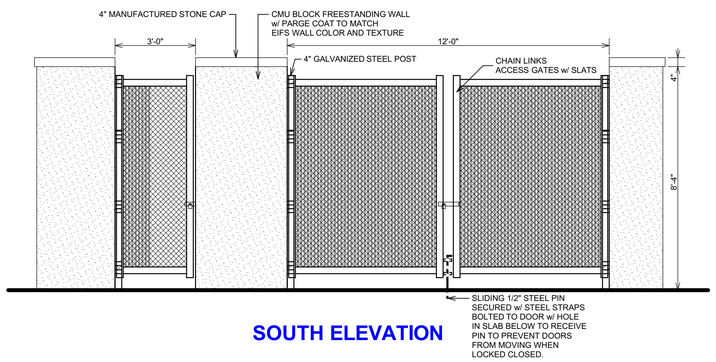

SOUTH ELEVATION

3 / L100 **REFUSE ENCLOSURE DETAILS**
SCALE: 3/8" = 1'-0"

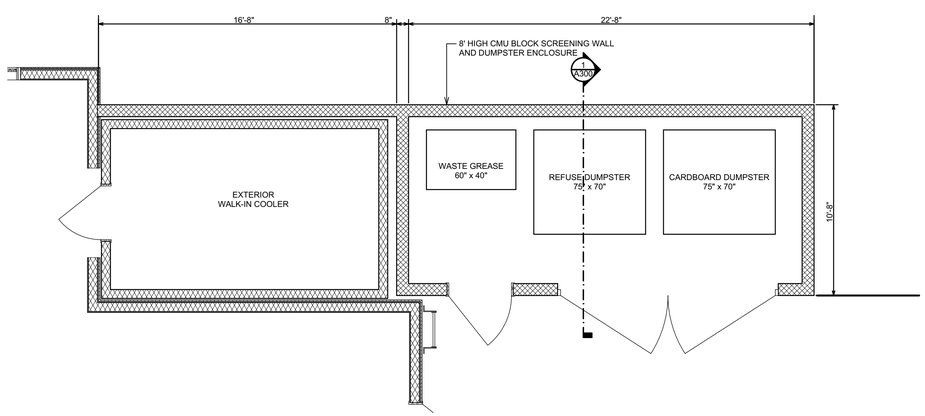

2 / L100 **REFUSE ENCLOSURE PLAN**
SCALE: 1/4" = 1'-0"

© Copyright 2020 C&S Design & Engineering, Inc., all rights reserved. Any use without permission is expressly prohibited. Plotted 6/14/2021 4:20 PM

PROPOSED CONSTRUCTION FOR:
EL TARASCO RESTAURANT
2200 LAKE SHORE DRIVE EAST, ASHLAND, WI 54806

ARCH SITE AND LANDSCAPING PLAN

C&S DESIGN & ENGINEERING with framework design inc
2023 6th Street West, Ashland, WI 54806
Telephone (715) 682-0330 www.csdesignengineering.com

DESIGNED: A.D.E.
DRAWN: A.D.E.
SCALE: AS NOTED
DATE: JUNE 2021
PROJECT NO. 20-3419
REVISIONS:
APPROVED: NOT FOR CONSTRUCTION OR FINAL PRICING
SHEET NO. L100

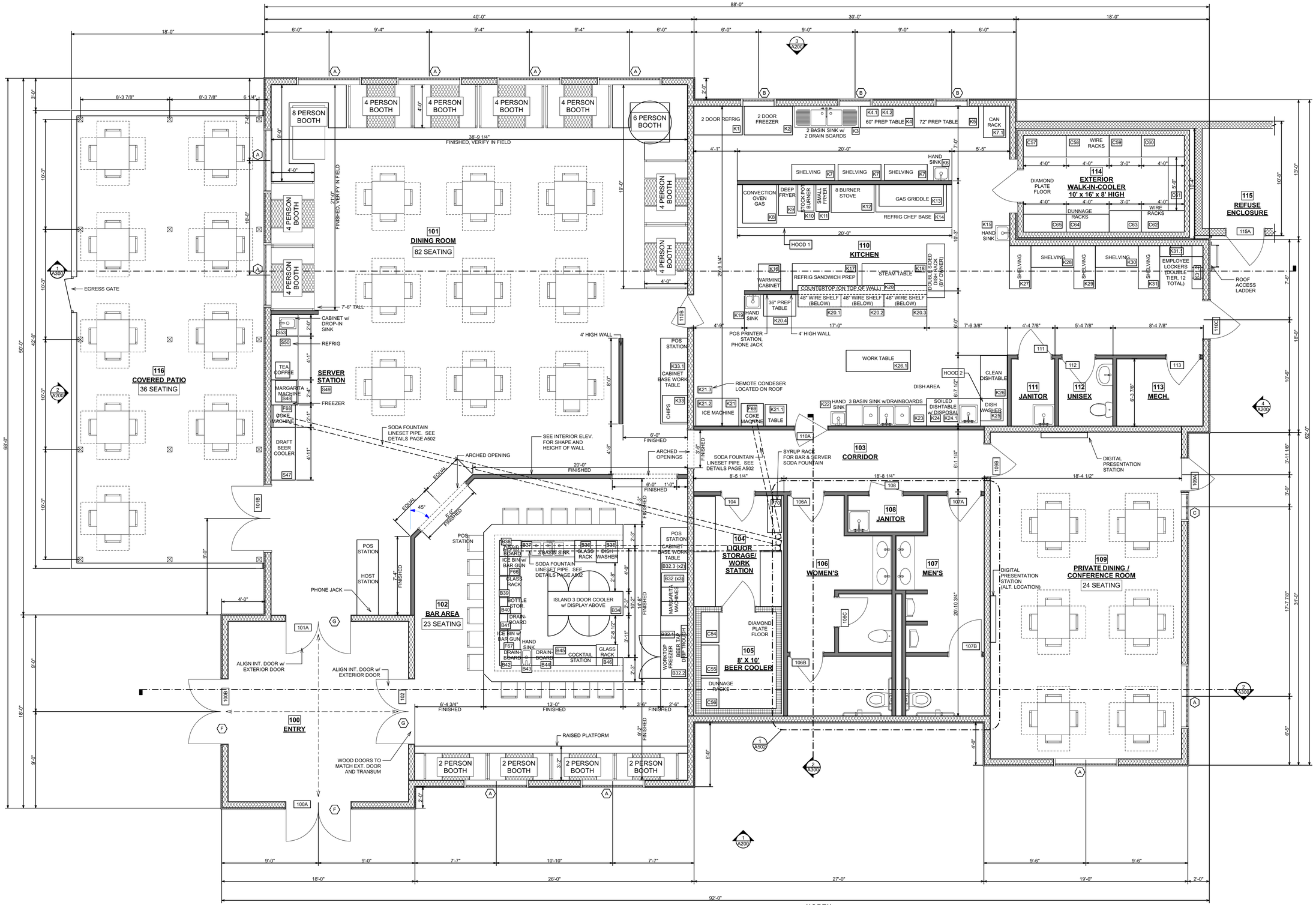

FIRST FLOOR PLAN

1 A100

SCALE: 1/4" = 1'-0"

NORTH

PROPOSED CONSTRUCTION FOR:

EL TARASCO RESTAURANT

2200 LAKE SHORE DRIVE EAST, ASHLAND, WI 54806

FLOOR PLAN

DESIGN & ENGINEERING with framework design inc

2023 6th Street West, Ashland, WI 54806
Telephone (715) 682-0330 www.csdesignengineering.com

DESIGNED: A.D.E.

DRAWN: A.D.E.

SCALE: AS NOTED

DATE: JUNE 2021

PROJECT NO. 20-3419

REVISIONS:

APPROVED:

NOT FOR CONSTRUCTION OR FINAL PRICING

SHEET NO. A100

© Copyright 2020 C&S Design & Engineering, Inc. all rights reserved. Any use without permission is expressly prohibited. Plotted 6/14/2021 4:20 PM

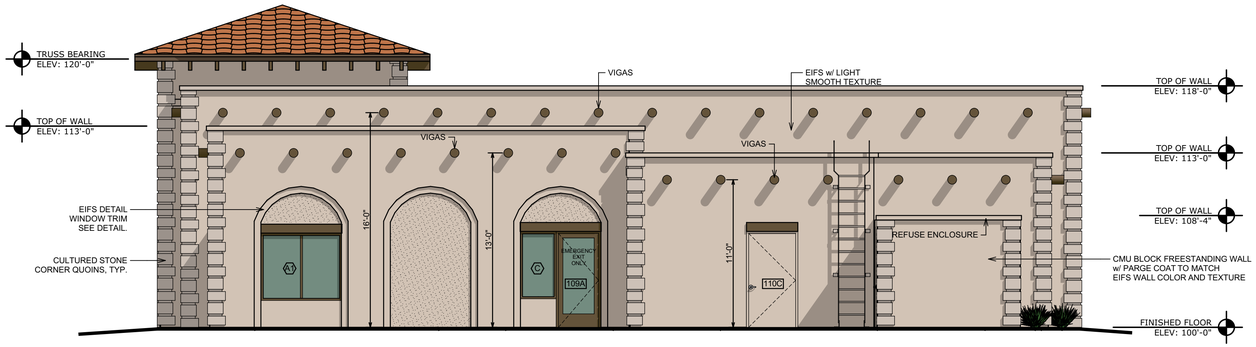

4 A200 EAST ELEVATION

SCALE: 3/16" = 1'-0"

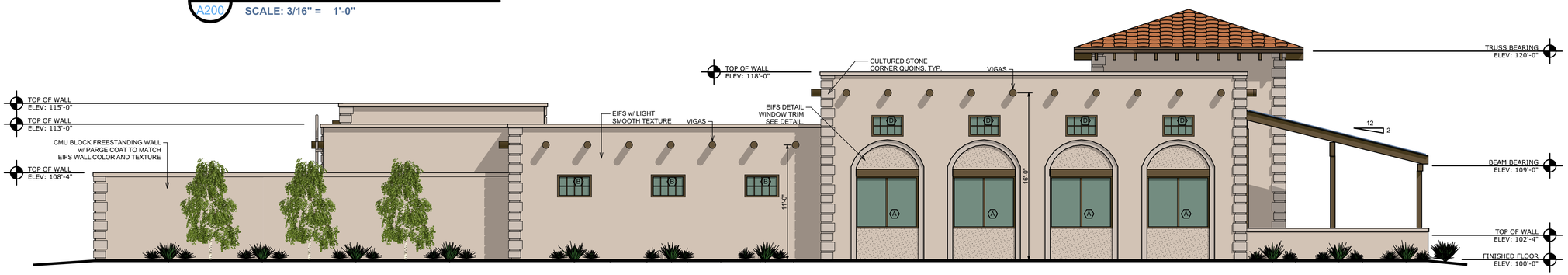

3 A200 NORTH ELEVATION

SCALE: 3/16" = 1'-0"

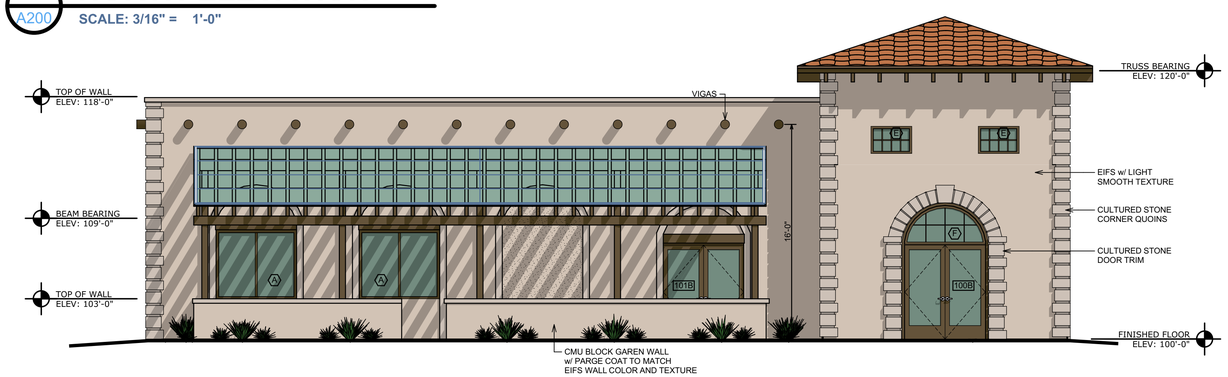

2 A200 WEST ELEVATION

SCALE: 3/16" = 1'-0"

1 A200 SOUTH ELEVATION

SCALE: 3/16" = 1'-0"

PROPOSED CONSTRUCTION FOR:

EL TARASCO RESTAURANT

2200 LAKE SHORE DRIVE EAST, ASHLAND, WI 54806

ELEVATIONS

DESIGN & ENGINEERING
with framework design inc
2023 6th Street West, Ashland, WI 54806
Telephone (715) 682-0330 www.csdesignengineering.com

DESIGNED: A.D.E.

DRAWN: A.D.E.

SCALE: AS NOTED

DATE: JUNE 2021

PROJECT NO. 20-3419

REVISIONS:

APPROVED:

NOT FOR CONSTRUCTION OR FINAL PRICING

SHEET NO. A200

© Copyright 2020 C&S Design & Engineering, Inc. all rights reserved. Any use without permission is expressly prohibited. Plotted 6/14/2021 4:20 PM

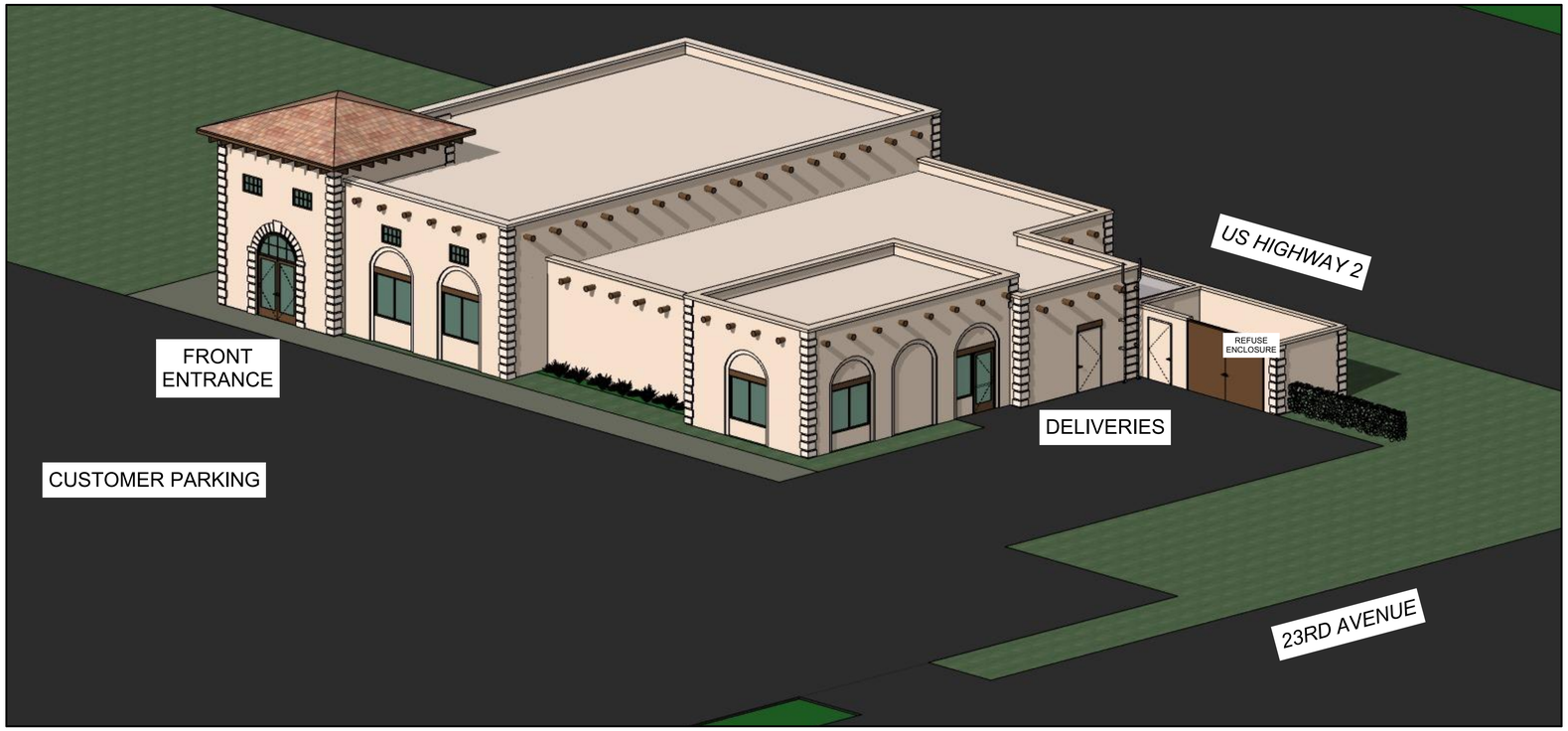

VIEW OF SITE

FRONT ENTRANCE

SCALE: 1:142.86

STREET VIEW (PATIO AREA)

© Copyright 2020 C&S Design & Engineering, Inc. all rights reserved. Any use without permission is expressly prohibited. Plotted 6/14/2021 4:20 PM

PROPOSED CONSTRUCTION FOR:

EL TARASCO RESTAURANT

2200 LAKE SHORE DRIVE EAST, ASHLAND, WI 54806

MODEL VIEWS

C&S DESIGN & ENGINEERING
with framework design inc
2023 6th Street West, Ashland, WI 54806
Telephone (715) 682-0330 www.csdesignengineering.com

DESIGNED: A.D.E.

DRAWN: A.D.E.

SCALE: AS NOTED

DATE: JUNE 2021

PROJECT NO. 20-3419

REVISIONS:

APPROVED: NOT FOR CONSTRUCTION OR FINAL PRICING

SHEET NO. A201

ASHLAND ALVAREZ DEVELOPMENT

EL TARASCO RESTAURANT

ASHLAND, WI

VICINITY MAP

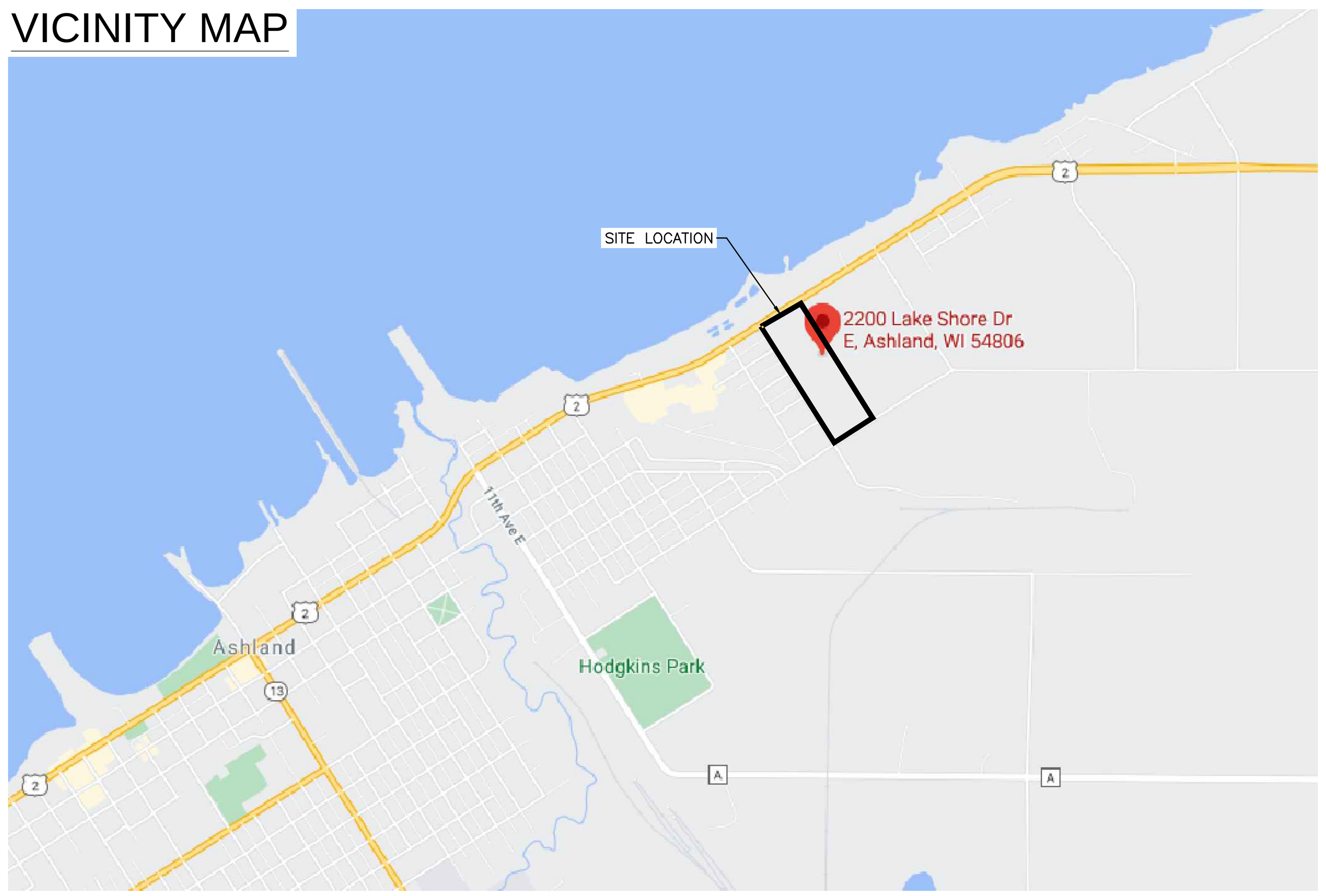

RENDERING

OWNER

JOSE J. ALVAREZ
ASHLAND AREA DEVELOPMENT
E: sschicagoil@yahoo.com
P: 715.292.2354
819 MACARTHUR AVE
ASHLAND, WI 54806

DESIGN TEAM

CIVIL ENGINEER

AMI CONSULTING ENGINEERS, P.A.
MICHAEL OSTENDORF
MICHAEL.OSTENDORF@AMIENGINEERS.COM
3640 TALMAGE CIRCLE
VADNAIS HEIGHTS, MN 55110
651.344.8783

SHEET INDEX

CIVIL

T1.0	TITLE SHEET
T1.1	PROJECT NOTES
C1.0	DEMOLITION PLAN
C2.0	SITE PLAN
C3.0	GRADING PLAN
C4.0	UTILITY PLAN
C5.0	STORMWATER MANAGEMENT PLAN
C6.0-6.2	STORMWATER POLLUTION PREVENTION PLAN (SWPPP)
C8.0	DETAILS
L1.0-2.0	LANDSCAPE PLAN

Know what's **below.**
Call before you dig.

THE LOCATIONS OF UNDERGROUND UTILITIES HAVE BEEN PROVIDED BY THE UTILITY OWNER, ARE SHOWN IN AN APPROXIMATE WAY ONLY AND HAVE NOT BEEN INDEPENDENTLY VERIFIED. THE CONTRACTOR SHALL FIELD VERIFY EXACT LOCATION OF ALL UTILITIES BEFORE COMMENCING CONSTRUCTION PER STATE LAW.

GOVERNING SPECIFICATIONS

THE 2021 EDITION OF THE WISCONSIN DEPARTMENT OF TRANSPORTATION STANDARD SPECIFICATIONS AND THE CURRENT VERSION OF THE **CITY OF ASHLAND** STANDARD CONSTRUCTION SPECIFICATIONS SHALL GOVERN.

AMI Consulting Engineers P.A.
3640 TALMAGE CIR. VADNAIS HEIGHTS
651.344.8783 - amiengineers.com
SUPERIOR - IRON RANGE

PRELIMINARY NOT FOR CONSTRUCTION

DATE:	REV:	DESCRIPTION	REV. BY:
3/21/2021	A	60% SITE PLAN	MHO
5/14/2021	B	ISSUED TO OWNER FOR REVIEW	MHO

ASHLAND ALVAREZ DEVELOPMENT
2200 LAKE SHORE DRIVE EAST
ASHLAND, WI 54806

TITLE SHEET

JOB No: 211012
DATE: XX/XX/XXXX
DRAWN BY: MTL
DESIGNED BY: BPK

SHEET: T1.0

© COPYRIGHT - AMI CONSULTING ENGINEERS P.A. - 2006

GENERAL PROJECT NOTES:

1. BIDDER WILL VISIT THE SITE PRIOR TO BIDDING TO UNDERSTAND THE SCOPE OF WORK. NO ADDITIONAL COMPENSATION WILL BE ALLOWED FOR ITEMS THAT COULD HAVE BEEN IDENTIFIED BY A SITE VISIT, STUDYING THE TOPOGRAPHIC SURVEY, THOROUGHLY REVIEWING ALL PLANS AND REPORTS, AND ADDITIONAL INFORMATION REQUESTED FOR CLARIFICATION PRIOR TO BIDDING.
2. THE CONTRACTOR IS RESPONSIBLE FOR OBTAINING ALL REQUIRED PERMITS PRIOR TO STARTING WORK.
3. EXISTING TOPOGRAPHIC AND BOUNDARY INFORMATION TAKEN FROM SURVEY BY AMI CONSULTING ENGINEERS IN 2018. SUPPLEMENTAL INFORMATION GATHERED FROM SITE VISITS, AND PLANS OBTAINED FROM CLIENT, ARE SHOWN AS APPROXIMATE LOCATIONS ONLY AND SHALL BE FIELD VERIFIED PRIOR TO OR DURING CONSTRUCTION. CONTACT ENGINEER IMMEDIATELY IF ANY DISCREPANCIES ARE DISCOVERED.
4. THE LOCATIONS OF ALL EXISTING UTILITIES SHOWN ON THIS PLAN HAVE BEEN DETERMINED FROM THE BEST INFORMATION AVAILABLE AND ARE GIVEN FOR THE CONVENIENCE OF THE CONTRACTOR. THE ENGINEER ASSUMES NO RESPONSIBILITY FOR THEIR ACCURACY. PRIOR TO THE START OF ANY DEMOLITION ACTIVITY, THE CONTRACTOR SHALL NOTIFY THE UTILITY COMPANIES FOR ONSITE LOCATIONS OF EXISTING UTILITIES. THE CONTRACTOR IS REQUIRED TO TAKE DUE PRECAUTIONARY MEASURES TO PROTECT ANY EXISTING UTILITIES OR STRUCTURES LOCATED AT THE WORK SITE.
5. PROVIDE AND MAINTAIN TRAFFIC CONTROL DEVICES WHERE NECESSARY. PLACEMENT OF THESE DEVICES SHALL BE APPROVED BY THE CITY AND ENGINEER PRIOR TO PLACEMENT. TRAFFIC CONTROL DEVICES SHALL MEET THE REQUIREMENTS OF THE WISMUTCD, CURRENT ADDITION.
6. CONTRACTOR SHALL MAINTAIN FULL ACCESS TO ADJACENT PROPERTIES DURING CONSTRUCTION AND TAKE ALL PRECAUTIONS NECESSARY TO AVOID PROPERTY DAMAGE TO ADJACENT PROPERTIES.
7. ALL CONSTRUCTION WORK SHALL BE COMPLETED WITHIN CITY APPROVED WORKING HOURS.
8. INSTALL FENCING AND BARRICADING AS NECESSARY TO PROTECT THE PUBLIC.

GENERAL SITE DEMOLITION AND CLEARING NOTES:

1. CONTRACTOR SHALL COORDINATE LIMITS OF REMOVALS WITH PROPOSED IMPROVEMENTS AND SHALL BE RESPONSIBLE FOR PROTECTING EXISTING SITE FEATURES (STRUCTURES, TREES, CURBS, WALKS, PAVEMENTS, UTILITIES, SIGNAGE, FENCES, ETC.) WHICH ARE TO REMAIN. REPAIR OR REPLACE, TO OWNER'S SATISFACTION, ANY DAMAGE TO EXISTING PROPERTY OR SITE FEATURES WHICH ARE TO REMAIN, AT NO ADDITIONAL COST.
2. COORDINATE DISRUPTION OF UTILITY SERVICES WITH THE OWNER'S PROJECT REPRESENTATIVE AND UTILITY OWNER, PUBLIC OR PRIVATE. CONTRACTOR TO PROVIDE TEMPORARY UTILITIES AS NECESSARY TO MAINTAIN BUILDING SERVICES.
3. THE OWNER'S ACTIVITIES MAY CONTINUE ON THE SITE DURING CONSTRUCTION. THE CONTRACTOR SHALL COORDINATE SEQUENCE OF WORK WITH THE OWNER. WEEKEND AND/OR OFF-PEAK HOURS MAY BE REQUIRED.
4. PRIOR TO START OF ANY WORK, ALL EROSION AND SEDIMENT CONTROL PROTECTION MEASURES SHALL BE IN PLACE. SEE EROSION CONTROL PLAN OR SWPPP FOR DETAILS.
5. CONTRACTOR SHALL PRESERVE ALL VEGETATION NOT TO BE REMOVED BY CONSTRUCTION. CONTRACTOR SHALL BE RESPONSIBLE FOR RE-SEEDING OR SODDING AREAS DISTURBED BY CONSTRUCTION.
6. CLEARLY IDENTIFY AND PROTECT EACH TREE THAT IS TO REMAIN PRIOR TO STARTING SITE CLEARING. CONTACT OWNER'S PROJECT REPRESENTATIVE FOR SITE INSPECTION AFTER ALL "TO REMAIN" TREES HAVE BEEN IDENTIFIED. TREES THAT ARE TO BE PROTECTED SHALL HAVE TEMPORARY FENCING PLACED AT THE DRIP LINE AROUND EACH TREE.
7. STOCKPILE TOPSOIL FOR REUSE ON SITE. VERIFY THE STRIPPED TOPSOIL MEETS SPECIFICATIONS FOR THE PROPOSED USE. VERIFY THE AMOUNT OF TOPSOIL NEEDED AND REMOVE EXCESS FROM SITE.
8. ALL MATERIAL REMOVED SHALL BE DISPOSED OF OFF-SITE AND IN A LEGAL MANNER.
9. MATERIAL TO BE SALVAGED FOR REUSE BY OWNER SHALL BE REMOVED UNDAMAGED IN USABLE CONDITION. TEMPORARY PROTECTED STORAGE ON-SITE MAY BE REQUIRED.
10. ON-SITE BROKERAGE OF MATERIALS SALVAGED BY CONTRACTOR FROM MATERIALS TO BE REMOVED IS NOT PERMITTED WITHOUT PRIOR WRITTEN OWNER APPROVAL.
11. LOCATION AND ELEVATIONS OF EXISTING IMPROVEMENTS SHALL BE CONFIRMED BY THE CONTRACTOR THROUGH FIELD EXPLORATIONS PRIOR TO CONSTRUCTION. CONTRACTOR SHALL REPORT TO THE ENGINEER ANY DISCREPANCIES BETWEEN THEIR MEASUREMENTS AND THESE PLANS. CONTRACTOR SHALL ALSO MAKE EXPLORATORY EXCAVATIONS AND LOCATE EXISTING UNDERGROUND UTILITIES SUFFICIENTLY AHEAD OF CONSTRUCTION TO PERMIT REVISIONS TO PLANS IF NECESSARY. IF DEEMED NECESSARY, CONTRACTOR IS REQUIRED TO TAKE PRECAUTIONARY MEASURES TO PROTECT THE UTILITY LINES SHOWN AND ANY OTHER EXISTING LINES NOT OF RECORD OR NOT SHOWN ON THESE PLANS.

SIGNAGE AND MARKING NOTES:

1. ALL SIGNS SHALL BE ACCORDANCE WITH THE WISMUTCD, CURRENT VERSION.
2. SEE REGULATORY SIGN DETAIL FOR SIGN AND POST DETAILS AND SIGN DESIGNATION AND SIZE INFORMATION.
3. ACCESSIBLE PARKING SIGNS SHALL BE PER WISCONSIN MUTCD SIGN R7-8A. VAN ACCESSIBLE PARKING SIGNS PER R7-8V INDICATED AS "VAN". SEE ACCESSIBLE SIGN AND POST DETAIL.
4. PROVIDE 4" WIDE SOLID WHITE STRIPING IN PARKING AREAS, UNLESS NOTED OTHERWISE
5. PROVIDED PAVEMENT MARKINGS AND PAINT SYMBOLS AT ACCESSIBLE PARKING SPACES PER MN MUTCD, ADA AND LOCAL CODE

GENERAL GEOMETRIC AND PAVING NOTES:

1. SITE DIMENSIONS SHOWN ON THIS PLAN SHALL BE USED FOR ALL LAYOUT WORK. CHECK ALL PLAN AND DETAIL DIMENSIONS. BUILDING AND SITE IMPROVEMENTS SHALL BE LAID OUT ON SITE BY A REGISTERED LAND SURVEYOR, OR LICENSED ENGINEER.
2. REFER TO SITE DEMOLITION PLAN FOR LIMITS OF PAVEMENT REMOVAL, IF APPLICABLE.
3. ALL PAVING DIMENSIONS ARE TO FLOW LINE OF CURB UNLESS NOTED OTHERWISE. THE FLOW LINE OF CURB IS ASSUMED TO BE 8 INCHES FROM THE BACK OF CURB.
4. MEET REQUIREMENTS OF LOCAL GOVERNING AUTHORITY FOR WORK WITHIN THE PUBLIC RIGHT OF WAY, INCLUDING TEMPORARY TRAFFIC CONTROL. A TRAFFIC CONTROL PLAN SHALL BE PROVIDED AND APPROVED BY THE CITY OR APPLICABLE ROAD AUTHORITY PRIOR TO BEGINNING WORK IN THE RIGHT OF WAY.
5. ALL SIDEWALKS SHALL HAVE POSITIVE SLOPE AWAY FROM THE BUILDING. THE MAXIMUM CROSS SLOPE SHALL BE 2.0% AND THE MAXIMUM LONGITUDINAL SLOPE SHALL BE 5.0% UNLESS OTHERWISE SHOWN ON THE DRAWINGS.
6. NO SLOPE IN ANY DIRECTION SHALL EXCEED 2% IN ACCESSIBLE PARKING AND LOADING AREAS.
7. MATCH NEW AND EXISTING PAVEMENT SURFACES, SIDEWALKS AND CURBS AT SAWCUT LINES, ALLOWING NO PONDING OF WATER AT JOINTS. PROVIDE SMOOTH GRADE TRANSITION ACROSS NEW AND EXISTING JOINTS.
8. ALLOW MINIMUM OF SEVEN DAYS CURE FOR CURB AND GUTTER PRIOR TO PAVING.
9. ALLOW MINIMUM OF 24 HOUR COOLING PRIOR TO ALLOWING TRAFFIC ON BITUMINOUS PAVING.
10. PROVIDE 4' TRANSITION OF B618 CURB AND GUTTER EITHER SIDE OF RECTANGULAR CATCH BASINS TO MATCH WIDTH OF CASTING.

GENERAL GRADING AND DRAINAGE NOTES:

1. ALL EROSION AND SEDIMENT CONTROL MEASURES SHALL BE IN PLACE BEFORE BEGINNING SITE GRADING ACTIVITIES.
2. CONTRACTOR SHALL BE RESPONSIBLE FOR DETERMINING QUANTITIES OF CUT, FILL AND WASTE MATERIAL TO BE HANDLED, AND FOR THE AMOUNT OF GRADING TO BE DONE. ALL COSTS ASSOCIATED WITH IMPORTING SUITABLE MATERIAL AND EXPORTING UNSUITABLE/EXCESS/WASTE MATERIAL SHALL BE INCLUDED IN THE BID PRICE.
3. CONTRACTOR SHALL STRIP, STOCKPILE AND RE-SPREAD EXISTING ONSITE TOPSOIL, IF MATERIAL IS APPROVED BY THE LANDSCAPE ARCHITECT AND/OR SPECIFICATIONS. PROVIDE A UNIFORM THICKNESS OF 6" MINIMUM IN ALL DISTURBED AREAS TO BE LANDSCAPED.
4. CONTRACTOR SHALL DISPOSE OF ANY EXCESS SOIL MATERIAL UNLESS OTHERWISE DIRECTED.
5. REFER TO LANDSCAPE PLAN FOR PERMANENT TURF RESTORATION AND PLANTING INFORMATION.
6. MAINTAIN TEMPORARY PROTECTION MEASURES DURING CONSTRUCTION ACTIVITIES. SEE SITE REMOVALS PLAN FOR ADDITIONAL INFORMATION. PROVIDE ADDITIONAL PROTECTION AS NECESSARY AS WORK PROGRESSES.
7. FILL POTHOLES, LOW SPOTS, AND OVERLAY GUTTER WHERE NEEDED TO ATTAIN PROPER DRAINAGE WHEN NEEDED
8. SEE CIVIL SITE PLAN FOR SITE LAYOUT.
9. PROPOSED CONTOURS AND SPOT ELEVATIONS ARE TO FINISHED SURFACE GRADE.
10. SPOT ELEVATIONS SHOWN ADJACENT TO CURB REFER TO GUTTER/FLOW LINE. SPOT ELEVATION SHOWN FOR TOP OF CURB ARE LABELED WITH TC (TOP OF CURB). SPOT ELEVATIONS LABELED ME REFERS TO MATCH EXISTING GRADE, EOF REFERS TO EMERGENCY OVERFLOW CONTROL ELEVATION, TW REFERS TO TOP OF WALL AND BW REFERS TO BOTTOM OF WALL.
11. PROVIDE POSITIVE DRAINAGE AWAY FROM BUILDINGS AT ALL TIMES.
12. NO GRADED SLOPES SHALL EXCEED 3:1 (HORIZONTAL TO VERTICAL) UNLESS OTHERWISE NOTED.
13. UNIFORMLY GRADE AREAS WITHIN LIMITS OF GRADING AND PROVIDE A SMOOTH FINISHED SURFACE WITH UNIFORM SLOPES BETWEEN POINTS WHERE ELEVATIONS ARE SHOWN OR BETWEEN SUCH POINTS AND EXISTING GRADES.
14. LIMIT THE DISTURBED AREA AS MUCH AS POSSIBLE AND CONDUCT GRADING OPERATIONS IN A MANNER TO MINIMIZE THE POTENTIAL FOR EROSION.

INCIDENTAL ITEMS:

1. ALL SAWCUTS AND FULL BITUMINOUS REMOVAL ASSOCIATED WITH CONCRETE CURB AND GUTTER REMOVAL AND PLACEMENT.
2. ALL EROSION AND SEDIMENT CONTROL MEASURES ARE THE RESPONSIBILITY OF THE CONTRACTOR.
3. ADDITIONAL INCIDENTAL ITEMS AS DESCRIBED IN THE REFERENCED TECHNICAL SPECIFICATIONS OR DETAILS.

AMI Consulting Engineers P.A.
3640 TALMAGE CIR. VADNAIS HEIGHTS
651.344.8783 - amiengineers.com
SUPERIOR - IRON RANGE

PRELIMINARY NOT FOR CONSTRUCTION

DATE:	REV:	DESCRIPTION	REV. BY:
3/21/2021	A	60% SITE PLAN	MHO
5/14/2021	B	ISSUED TO OWNER FOR REVIEW	MHO

ASHLAND ALVAREZ DEVELOPMENT
2200 LAKE SHORE DRIVE EAST
ASHLAND, WI 54806

PROJECT NOTES

JOB No: 211012
DATE: XX/XX/XXXX
DRAWN BY: MTL
DESIGNED BY: BPK

SHEET: T1.1

SITE DEMOLITION LEGEND:

- SAWCUT
- UTILITY PIPE REMOVAL
- CURB REMOVAL
- LIMITS OF CONSTRUCTION
- CONCRETE REMOVAL
- PAVEMENT REMOVAL
- TOPSOIL STRIPPING
- COMMON EXCAVATION
- SOIL BORING LOCATION

CONTROL POINTS				
CP#	NORTHING	EASTING	ELEVATION	DESCRIPTION
1	327120.20	508106.92	637.04'	3/4" REBAR
2	327389.70	507935.46	632.13'	3/4" REBAR
3	327640.38	508144.15	630.73'	3/4" REBAR

AMI
Consulting Engineers P.A.
3640 TALMAGE CIR. VADNAIS HEIGHTS
651.344.8783 - amiengineers.com
SUPERIOR - IRON RANGE

I HEREBY CERTIFY THAT THIS PLAN, SPECIFICATION, OR REPORT WAS PREPARED BY ME OR UNDER MY DIRECT SUPERVISION AND THAT I AM A DULY LICENSED PROFESSIONAL ENGINEER UNDER THE LAWS OF THE STATE OF MINNESOTA.

PRELIMINARY NOT FOR CONSTRUCTION

NAME: XXXXX
SIGNATURE:
DATE:
LIC. NO. XXXXX

DATE:	REV:	DESCRIPTION	REV. BY:
3/21/2021	A	60% SITE PLAN	MHO
5/14/2021	B	ISSUED TO OWNER FOR REVIEW	MHO

ASHLAND ALVAREZ DEVELOPMENT

2200 LAKE SHORE DRIVE EAST
ASHLAND, WI 54806

EXISTING CONDITIONS AND DEMOLITION PLAN

JOB No: 211012
DATE: XX/XX/XXXX
DRAWN BY: MTL
DESIGNED BY: BPK

SHEET:
C1.0

© COPYRIGHT - AMI CONSULTING ENGINEERS P.A. - 2006

© COPYRIGHT - AMI CONSULTING ENGINEERS P.A. 2006

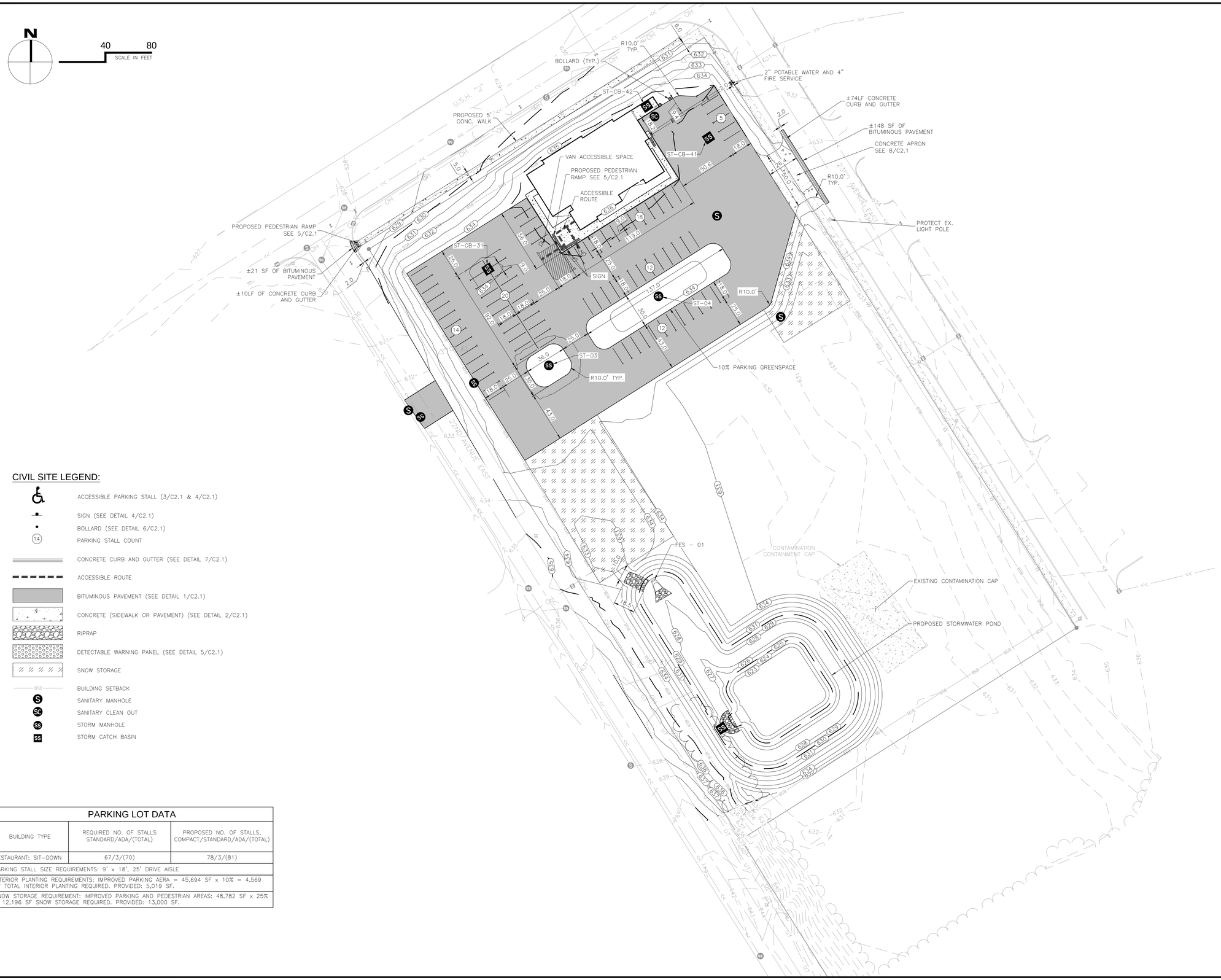

CIVIL SITE LEGEND:

- ACCESSIBLE PARKING STALL (3/C2.1 & 4/C2.1)
- SIGN (SEE DETAIL 4/C2.1)
- BOLLARD (SEE DETAIL 6/C2.1)
- (14) PARKING STALL COUNT
- CONCRETE CURB AND GUTTER (SEE DETAIL 7/C2.1)
- ACCESSIBLE ROUTE
- BITUMINOUS PAVEMENT (SEE DETAIL 1/C2.1)
- CONCRETE (SIDEWALK OR PAVEMENT) (SEE DETAIL 2/C2.1)
- RIPRAP
- DETECTABLE WARNING PANEL (SEE DETAIL 5/C2.1)
- SNOW STORAGE
- BSB BUILDING SETBACK
- S SANITARY MANHOLE
- Sc SANITARY CLEAN OUT
- SS STORM MANHOLE
- SS STORM CATCH BASIN

PARKING LOT DATA

BUILDING TYPE	REQUIRED NO. OF STALLS STANDARD/ADA/(TOTAL)	PROPOSED NO. OF STALLS, COMPACT/STANDARD/ADA/(TOTAL)
RESTAURANT: SIT-DOWN	67/3/(70)	78/3/(81)
PARKING STALL SIZE REQUIREMENTS: 9' x 18', 25' DRIVE AISLE		
INTERIOR PLANTING REQUIREMENTS: IMPROVED PARKING AERA = 45,694 SF x 10% = 4,569 SF TOTAL INTERIOR PLANTING REQUIRED. PROVIDED: 5,019 SF.		
SNOW STORAGE REQUIREMENT: IMPROVED PARKING AND PEDESTRIAN AREAS: 48,782 SF x 25% = 12,196 SF SNOW STORAGE REQUIRED. PROVIDED: 13,000 SF.		

AMI Consulting Engineers P.A.
3640 TALMAGE CIR. VADNAIS HEIGHTS
651.344.8783 - amienginеers.com
SUPERIOR - IRON RANGE

I HEREBY CERTIFY THAT THIS PLAN, SPECIFICATION, OR REPORT WAS PREPARED BY ME OR UNDER MY DIRECT SUPERVISION AND THAT I AM A DULY LICENSED PROFESSIONAL ENGINEER UNDER THE LAWS OF THE STATE OF WISCONSIN.

NOT FOR CONSTRUCTION
PRELIMINARY

SIGNATURE: _____
NAME: _____
DATE: _____

DATE:	REV:	DESCRIPTION	REV. BY:
3/21/2021	A	60% SITE PLAN	MHO
5/14/2021	B	ISSUED TO OWNER FOR REVIEW	MHO

ASHLAND ALVAREZ DEVELOPMENT
2200 LAKE SHORE DRIVE EAST
ASHLAND, WI 54806

SITE PLAN

JOB No: 211012
DATE: XX/XX/XXXX
DRAWN BY: MTL
DESIGNED BY: BPK

SHEET:
C2.0

12/19/2018 11:37 AM 2-2021 J:\211012_CD\Engineering_Alvarez Development\Civil_Survey\3_CAD and Plan Files_Plansheets\211012-C2.0-SITE.dwg

© COPYRIGHT ~ AMI CONSULTING ENGINEERS P.A. : 2006

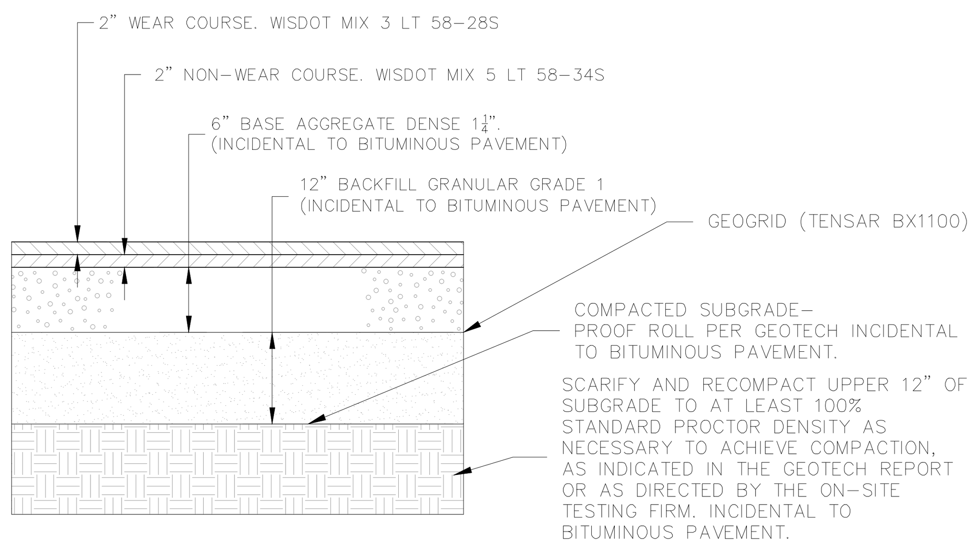

1 PARKING LOT SECTION – TYPICAL DETAIL
C2.1 NOT TO SCALE, SEE C2.0

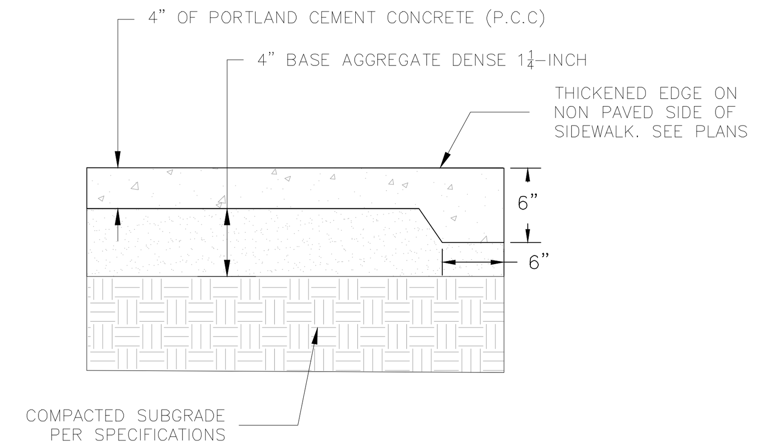

NOTES:

1. SIDEWALKS TO HAVE 2% MAXIMUM CROSS SLOPE, AND 5% LONGITUDINAL SLOPE UNLESS INDICATED OTHERWISE.
2. THICKEN EDGE ON NON-PAVED SIDE. INCIDENTAL TO CONCRETE SDIEWALK

2 CONCRETE SIDEWALK SECTION – TYPICAL DETAIL
C2.1 NOT TO SCALE, SEE C2.0

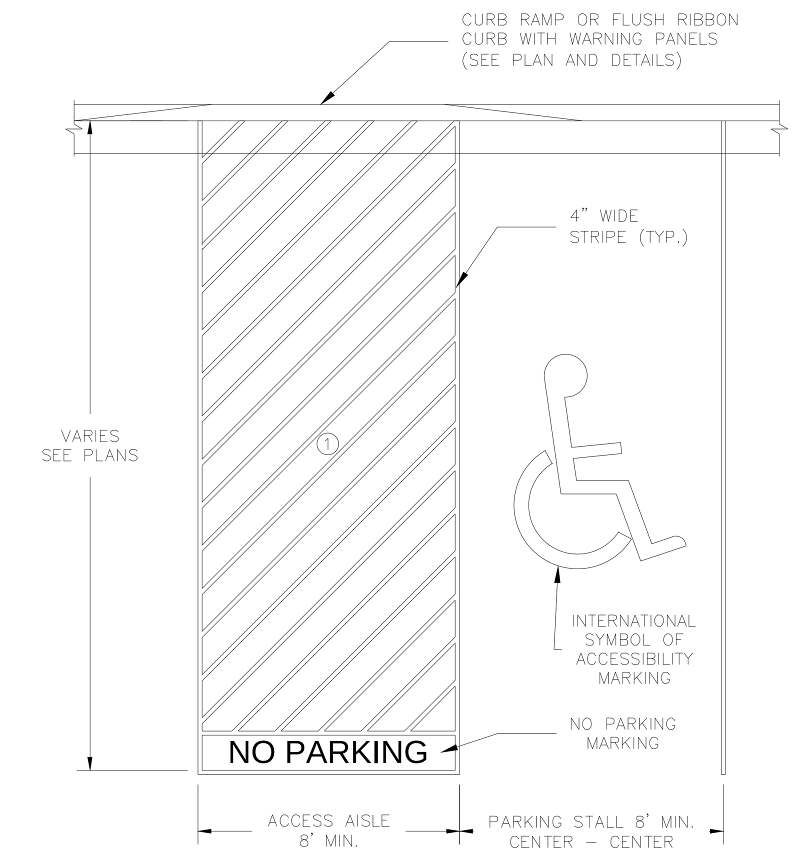

① ACCESS AISLE SHALL EXTEND THE FULL LENGTH OF THE PARKING SPACE IT SERVES

3 ACCESSIBLE PARKING PAVEMENT MARKINGS
C2.1 NOT TO SCALE, SEE C2.0

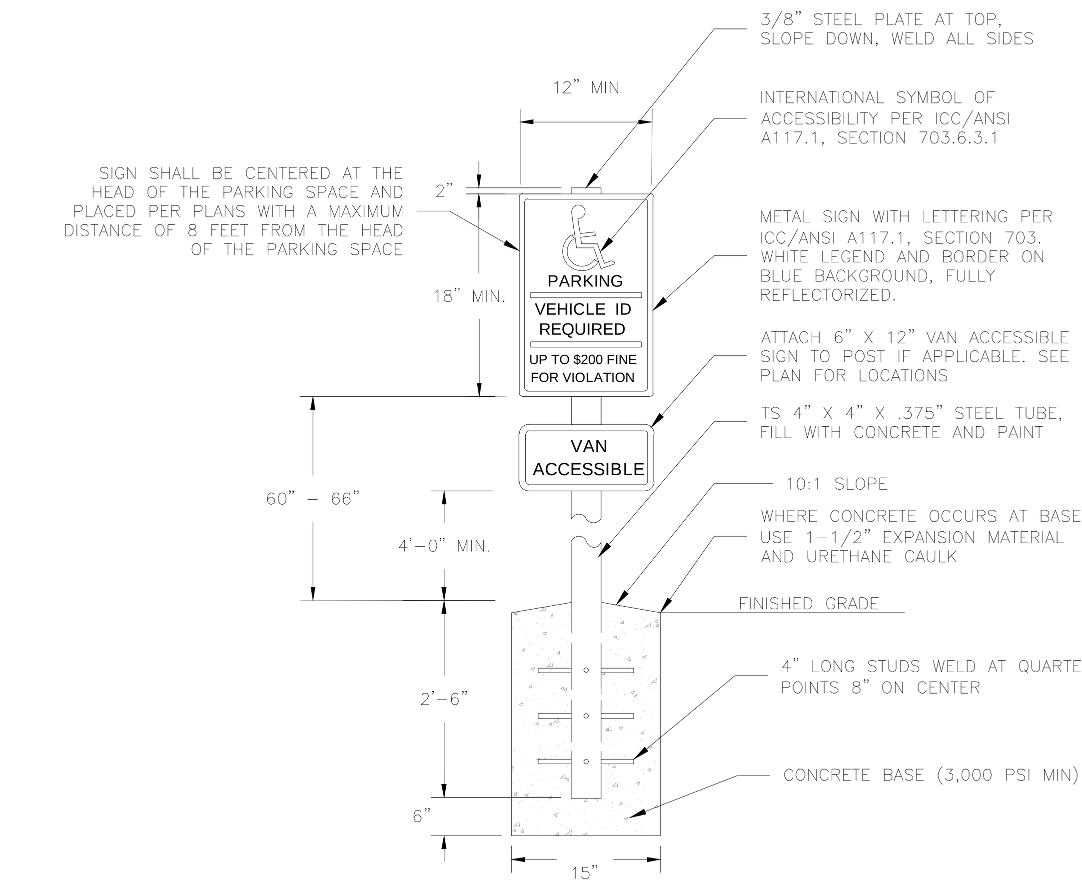

NOTES:

1. ACCESSIBLE PARKING SIGN SHALL CONFORM WITH ALL CURRENT STATE, FEDERAL, AND LOCAL CODES AND REGULATIONS

4 ACCESSIBLE SIGN AND STEEL POST
C2.1 NOT TO SCALE, SEE C2.0

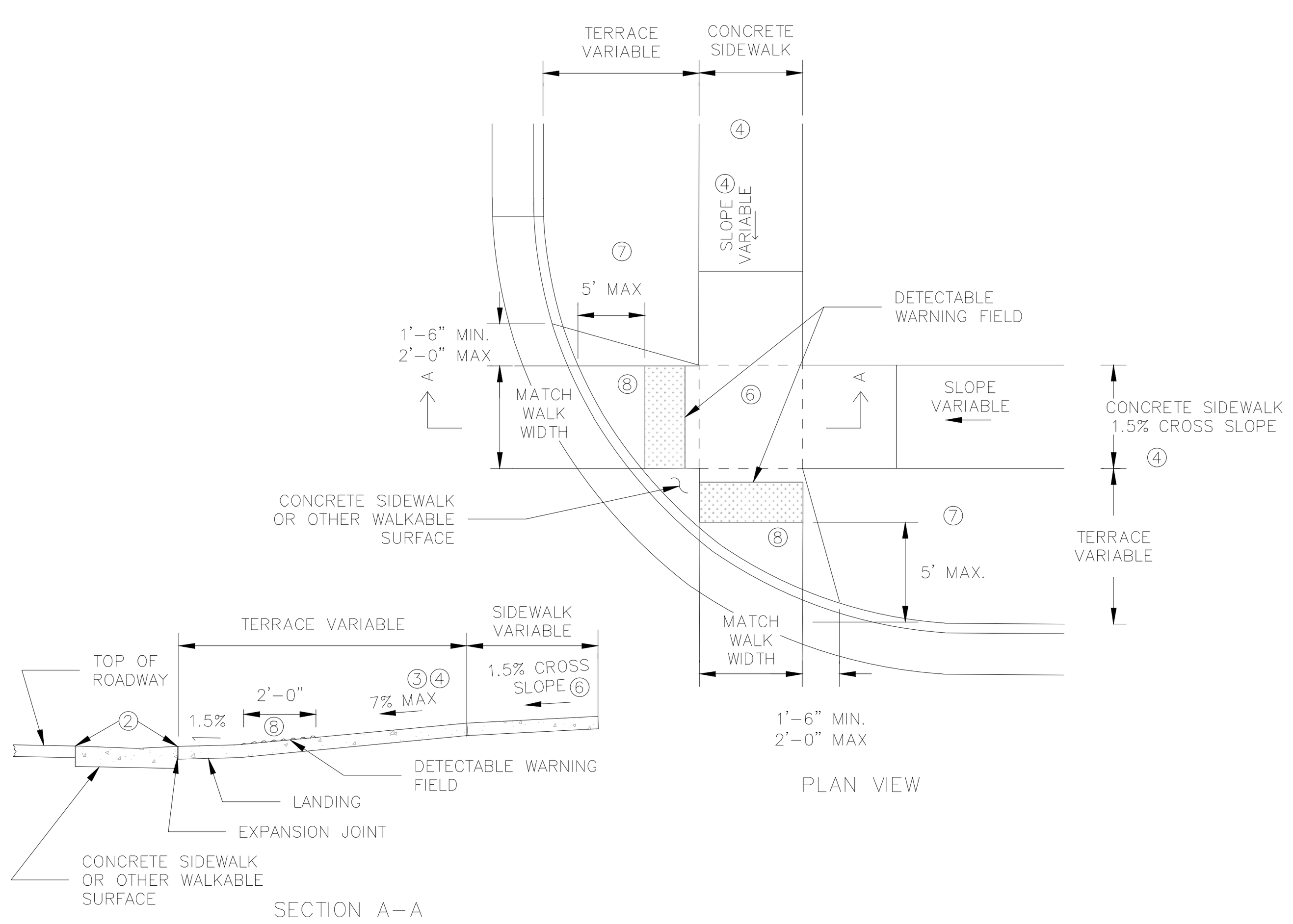

② GRADE CHANGE BETWEEN GUTTER FLAG SLOPE AND THE CURB RAMP SLOPE SHALL NOT EXCEED 11%. MAXIMUM GUTTER FLAG SLOPE IS 4%. PROVIDE LONGITUDINAL DRAINAGE AROUND CURB AND AWAY FROM CURB RAMP. NO VERTICAL LIPS OR DISCONTINUITIES GREATER THAN 1/4-INCH ARE ALLOWED. SLOPE OF CURB HEAD OPENING SHALL MATCH THE RAMP SLOPE, MINIMALLY 1.5% AND NOT TO EXCEED 7%. WHEN ADJACENT TO 1.5% LANDING, CONSTRUCT CURB HEAD OPENING AT 1.5% IN THE DIRECTION OF PEDESTRIAN TRAVEL.

③ ABSOLUTE MAXIMUM 12H:1V (8.33%) CURB RAMP SLOPE IS ALLOWABLE WITH FLATTENED GUTTER FLAG SLOPE AND NOT TO EXCEED 11% GRADE CHANGE

④ PLUS OR MINUS 0.5% CONSTRUCTION TOLERANCE IN SIDEWALK CROSS SLOPE. THE SIDEWALK CROSS SLOPE SHALL NOT EXCEED 2% WITHOUT PRIOR APPROVAL FROM THE ENGINEER.

⑥ PROVIDE A LEVEL LANDING (MAXIMUM 2% SLOPE) IN ANY DIRECTION OF PEDESTRIAN TRAVEL. STANDARD LANDING SIZE IS 5'X5'.

⑦ WHEN THIS GRADE BREAK DISTANCE EXCEEDS 5 FEET. USERAIAL DETECTABLE WARNING FIELD PER SDD 8D5-f.

⑧ PROVIDE GRADE BREAK PERPENDICULAR TO DIRECTION OF WHEELCHAIR TRAVEL.

⑨ WHEN THE DISTANCE IS LESS THAN 6'-0". IT MAY BE DIFFICULT TO ACHIEVE A 7% SLOPE OR FLATTER ALONG THE RAMP. REDUCE CURB HEIGHT IN TRIANGLE AREA TO ACHIEVE 7% SLOPE OR FLATTER ON RAMP. COUNSTRUCT 2-INCH MINIMUM CURB HEIGHT BETWEEN 10:1 FLARES.

5 DEPRESSED CORNER ACCESSIBLE RAMP
C2.1 NOT TO SCALE, SEE C2.0

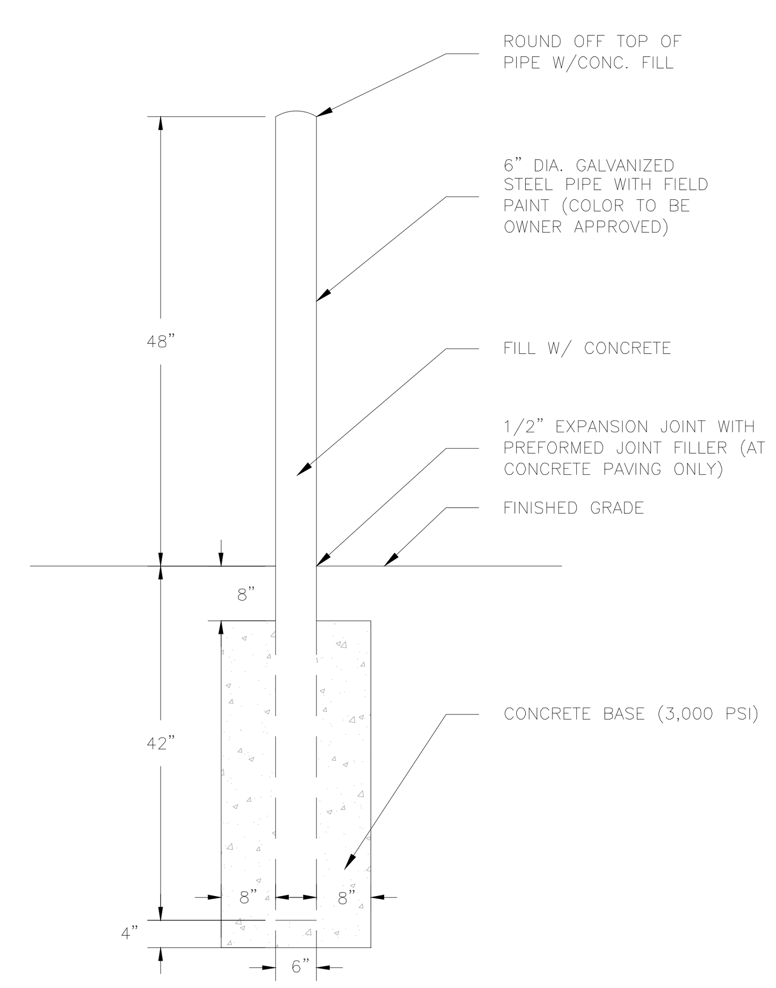

6 STEEL BOLLARD
C2.1 NOT TO SCALE, SEE C2.0

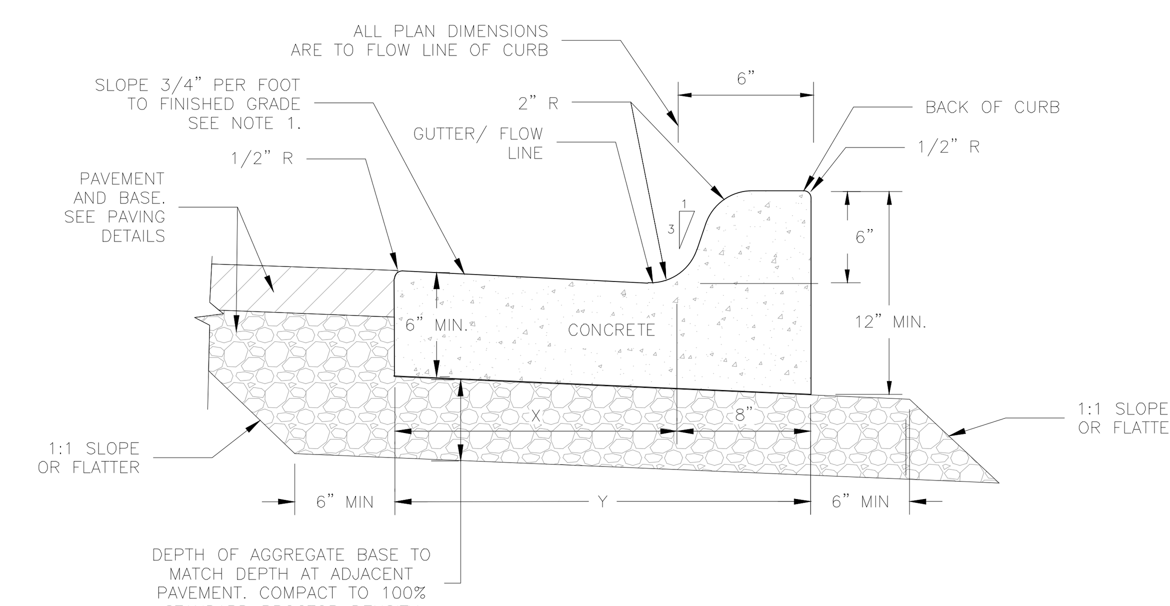

CURB TYPE	X	Y
2 FOOT	24"	30"
1 FOOT	12"	18"

TRANSVERSE SLOPE GUTTER SECTION
(FORMS MAY BE TILTED)

NOTES:

1. DIRECTION OF TIP-OUT GUTTER SLOPE TO MATCH DIRECTION OF ADJACENT PAVEMENT SLOPE.
2. PROVIDE TOOLED OR SAWN CONTRACTION JOINTS AT 10' SPACING, EXPANSION JOINTS AT 60' MAXIMUM SPACING.
3. CONSTRUCT CURB AND GUTTER PER WISCDOT SDD 8d1.
4. EXISTING CURB AND GUTTER IS "1 FOOT" CURB TYPE.

7 TYPE A&D (6") CURB AND GUTTER
C2.1 NOT TO SCALE, SEE C2.0

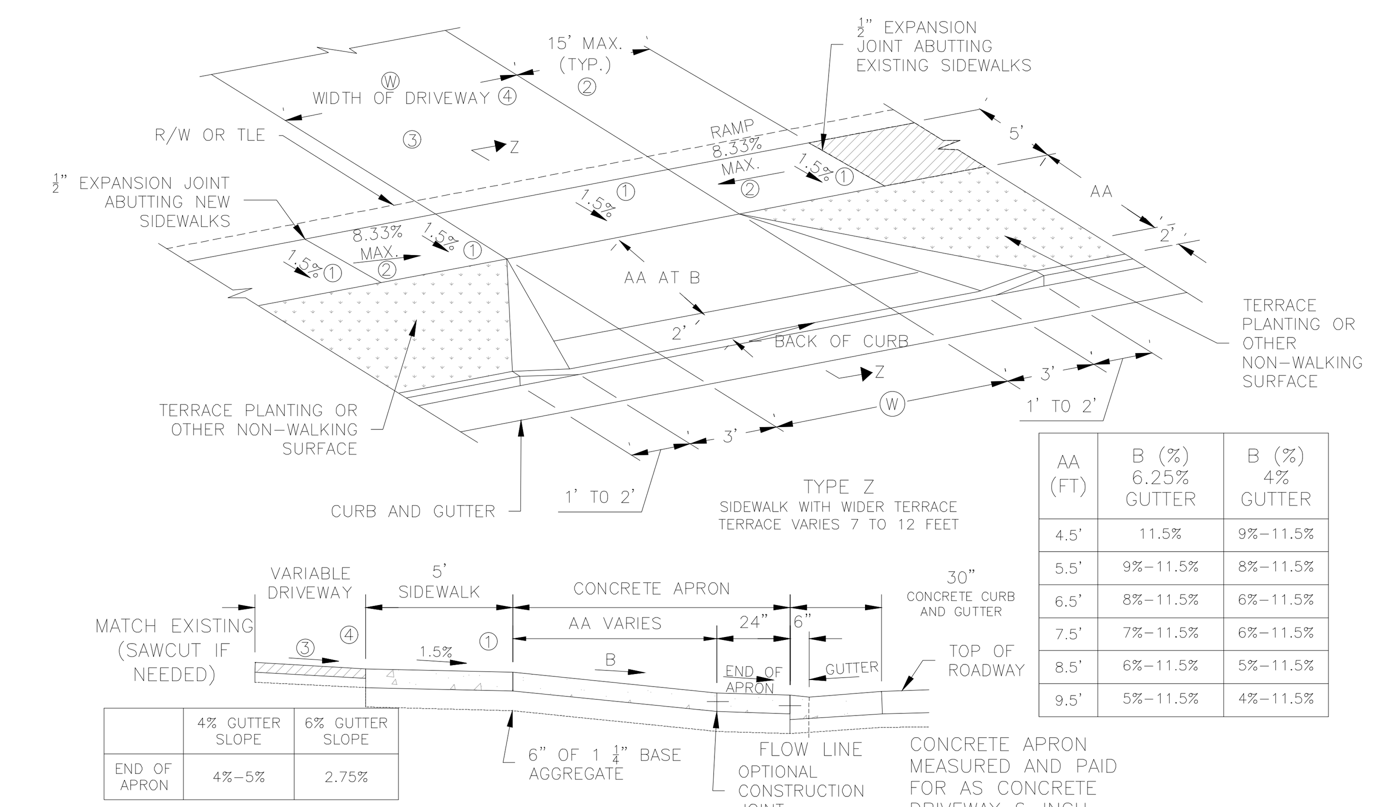

AA (FT)	B (%) 6.25% GUTTER	B (%) 4% GUTTER
4.5'	11.5%	9%-11.5%
5.5'	9%-11.5%	8%-11.5%
6.5'	8%-11.5%	6%-11.5%
7.5'	7%-11.5%	6%-11.5%
8.5'	6%-11.5%	5%-11.5%
9.5'	5%-11.5%	4%-11.5%

	4% GUTTER SLOPE	6% GUTTER SLOPE
END OF APRON	4%-5%	2.75%

NOTES:

PROVIDE AA AND B AS SHOWN ON CROSS SECTIONS

SIDEWALK MAY BE DEPRESSED IN DRIVEWAY AREAS FOR B VALUES NOT SHOWN IN TABLE Z. SIDEWALK WITHIN THE LIMITS OF THE DRIVEWAY PAID FOR AS CONCRETE DRIVEWAY 6-INCH. SEPARATE PAYMENT FOR BASE AGGREGATE WILL BE MADE

PROVIDE CONSTRUCTION JOINTS ALONG THE CENTER OF THE CONCRETE FOR DRIVEWAYS UNDER 20 FEET IN WIDTH AND AT THE THIRD POINTS OVER 20 FEET IN WIDTH

OFFSETS, ELEVATIONS AND PERCENT GRADE ARE SHOWN ON THE CROSS SECTIONS.

W. SHOWN ON PLAN AND PROFILE SHEETS
W.1 12' MIN. – 24' MAX. RESIDENTIAL AND NON-COMMERCIAL (PE AND FE)
W.2 16' MIN. – 35' MAX. COMMERCIAL (CE)

1. CONSTRUCTION TOLERANCE OF 0.5% ± FOR SIDEWALK CROSS SLOPE. THE SIDEWALK CROSS SLOPE SHALL NOT EXCEED 2%.
2. THE SIDEWALK RAMP MAXIMUM RUNNING SLOPE SHALL NOT REQUIRE THE RAMP LENGTH TO EXCEED 15 FEET TO AVOID CHASING THE SLOPE INDEFINITELY WHEN CONNECTING TO STEEP GRADES. WHEN APPLYING THE 15 FOOT MAXIMUM LENGTH, THE RUNNING SLOPE OF THE SIDEWALK SHALL BE AS FLAT AS FEASIBLE AND NOT EXCEED THE LONGITUDINAL GRADE OF THE ROADWAY.
3. DRIVEWAY SLOPES: DESIRABLE MAXIMUM
   3.1. 10.5% UP AWAY FROM SIDEWALK (SAG)
   3.2. 8.5% DOWN AWAY FROM SIDEWALK (CREST)
   3.3. ABSOLUTE MAXIMUM 15% FOR BOTH CREST AND SAG
4. DRIVEWAY TYPES
   4.1. 6-INCH CONCRETE DRIVEWAY PAVEMENT OVER 6-INCH BASE AGGREGATE
   4.2. 2-INCH TO 3-INCH ASPHALTIC SURFACE OVER 6-INCH BASE AGGREGATE
   4.3. 6-INCH BASE AGGREGATE (MAY BE INCREASED FOR CLAY SUBGRADES)

8 CONCRETE APRON WITH BOULEVARD
C2.1 NOT TO SCALE, SEE C2.0

AMI Consulting Engineers P.A.
3640 TALMAGE CIR. VADNAIS HEIGHTS
651.344.8783 - amiengineers.com
SUPERIOR - IRON RANGE

I HEREBY CERTIFY THAT THIS PLAN, SPECIFICATION, OR REPORT WAS PREPARED BY ME OR UNDER MY DIRECT SUPERVISION AND THAT I AM A DULY LICENSED PROFESSIONAL ENGINEER UNDER THE LAWS OF THE STATE OF MINNESOTA
NAME: XXXXX
SIGNATURE:
DATE:
LIC. No: XXXXX
PRELIMINARY NOT FOR CONSTRUCTION

DATE:	REV:	DESCRIPTION	REV. BY:
3/21/2021	A	60% SITE PLAN	MHO
5/14/2021	B	ISSUED TO OWNER FOR REVIEW	MHO

ASHLAND ALVAREZ DEVELOPMENT
2200 LAKE SHORE DRIVE EAST
ASHLAND, WI 54806

SITE DETAILS

JOB No: 211012
DATE: XX/XX/XXXX
DRAWN BY: MTL
DESIGNED BY: BPK

SHEET:
C2.1

12/19/2018 11:37 AM Z:\2021\211012_CSDesignEngineering_Alvarez Development\Civil_Survey\3_CAD and Point Files\e. Plansheets\211012 - C2.0 - SITE.dwg

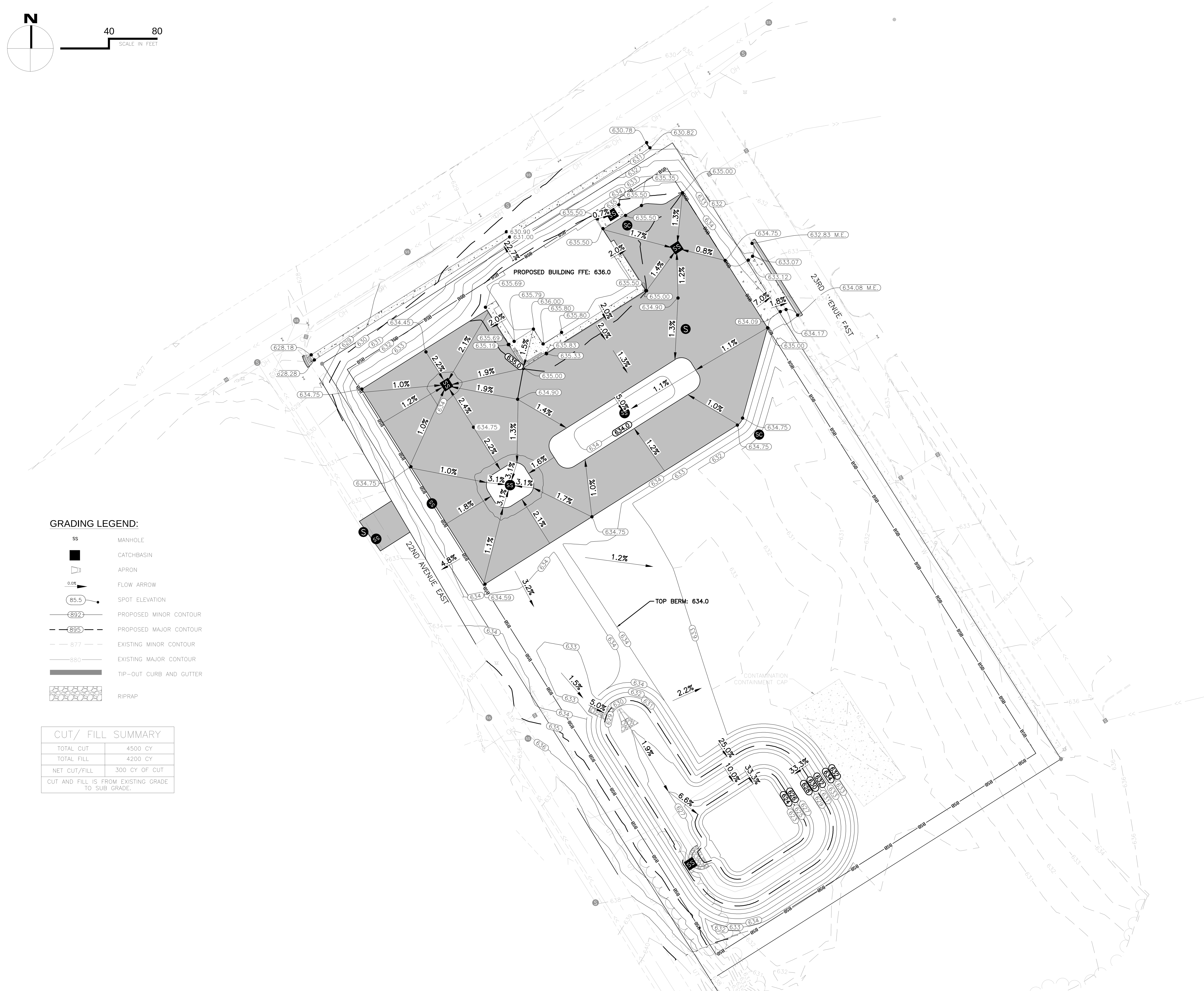

GRADING LEGEND:

- SS MANHOLE
- CATCHBASIN
- APRON
- FLOW ARROW
- SPOT ELEVATION
- PROPOSED MINOR CONTOUR
- PROPOSED MAJOR CONTOUR
- EXISTING MINOR CONTOUR
- EXISTING MAJOR CONTOUR
- TIP-OUT CURB AND GUTTER
- RIPRAP

CUT/ FILL SUMMARY	
TOTAL CUT	4500 CY
TOTAL FILL	4200 CY
NET CUT/FILL	300 CY OF CUT
CUT AND FILL IS FROM EXISTING GRADE TO SUB GRADE.	

© COPYRIGHT - AMI CONSULTING ENGINEERS P.A. - 2006

AMI Consulting Engineers P.A.
3640 TALMAGE CIR. VADNAIS HEIGHTS
651.344.8783 - amiengineers.com
SUPERIOR - IRON RANGE

I HEREBY CERTIFY THAT THIS PLAN, SPECIFICATION, OR REPORT WAS PREPARED BY ME OR UNDER MY DIRECT SUPERVISION AND THAT I AM A DULY LICENSED PROFESSIONAL ENGINEER UNDER THE LAWS OF THE STATE OF MINNESOTA

NAME: XXXXX
SIGNATURE:
DATE:
LIC. No: XXXXX

PRELIMINARY NOT FOR CONSTRUCTION

DATE:	REV:	DESCRIPTION	REV. BY:
3/21/2021	A	60% SITE PLAN	MHO
5/14/2021	B	ISSUED TO OWNER FOR REVIEW	MHO

ASHLAND ALVAREZ DEVELOPMENT
2200 LAKE SHORE DRIVE EAST
ASHLAND, WI 54806

GRADING PLAN

JOB No: 211012
DATE: XX/XX/XXXX
DRAWN BY: MTL
DESIGNED BY: BPK

SHEET:
C3.0

© COPYRIGHT - AMI CONSULTING ENGINEERS P.A. 2026

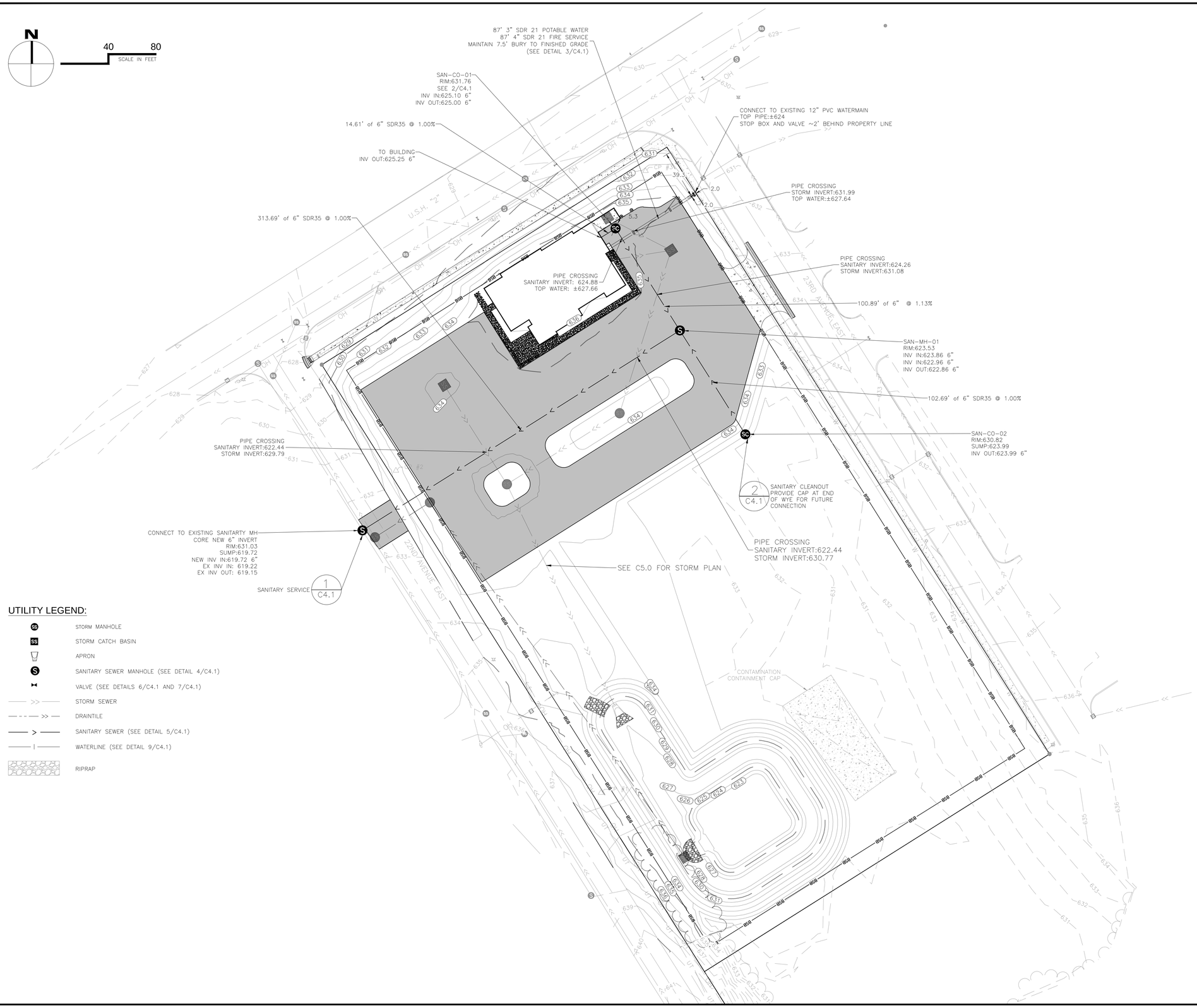

UTILITY LEGEND:

- STORM MANHOLE
- STORM CATCH BASIN
- APRON
- SANITARY SEWER MANHOLE (SEE DETAIL 4/C4.1)
- VALVE (SEE DETAILS 6/C4.1 AND 7/C4.1)
- STORM SEWER
- DRAINTILE
- SANITARY SEWER (SEE DETAIL 5/C4.1)
- WATERLINE (SEE DETAIL 9/C4.1)
- RIPRAP

AMI
Consulting Engineers P.A.
3640 TALMAGE CIR. VADNAIS HEIGHTS
651.344.8783 - amiengineers.com
SUPERIOR - IRON RANGE

I HEREBY CERTIFY THAT THE PLAN, SPECIFICATION, OR REPORT WAS PREPARED BY ME OR UNDER MY DIRECT SUPERVISION AND THAT I AM A DULY LICENSED PROFESSIONAL ENGINEER UNDER THE LAWS OF THE STATE OF WISCONSIN.

PRELIMINARY NOT FOR CONSTRUCTION

NAME: _____ SIGNATURE: _____ DATE: _____ REG. NO. _____

DATE:	REV:	DESCRIPTION:	REV. BY:
3/21/2021	A	60% SITE PLAN	MHO
5/14/2021	B	ISSUED TO OWNER FOR REVIEW	MHO

ASHLAND ALVAREZ DEVELOPMENT
2200 LAKE SHORE DRIVE EAST
ASHLAND, WI 54806

UTILITY PLAN

JOB No: 211012
DATE: XX/XX/XXXX
DRAWN BY: MTL
DESIGNED BY: BPK

SHEET:
C4.0

7/19/2018 11:37 AM Z:\2017\211012_CD\Design\Engineering\Alvarez Development\Civil_Survey\3_CAD and Plan Files\ue Plansheet\211012 - C4.0 - Utility.dwg

© COPYRIGHT - AMI CONSULTING ENGINEERS P.A. - 2006

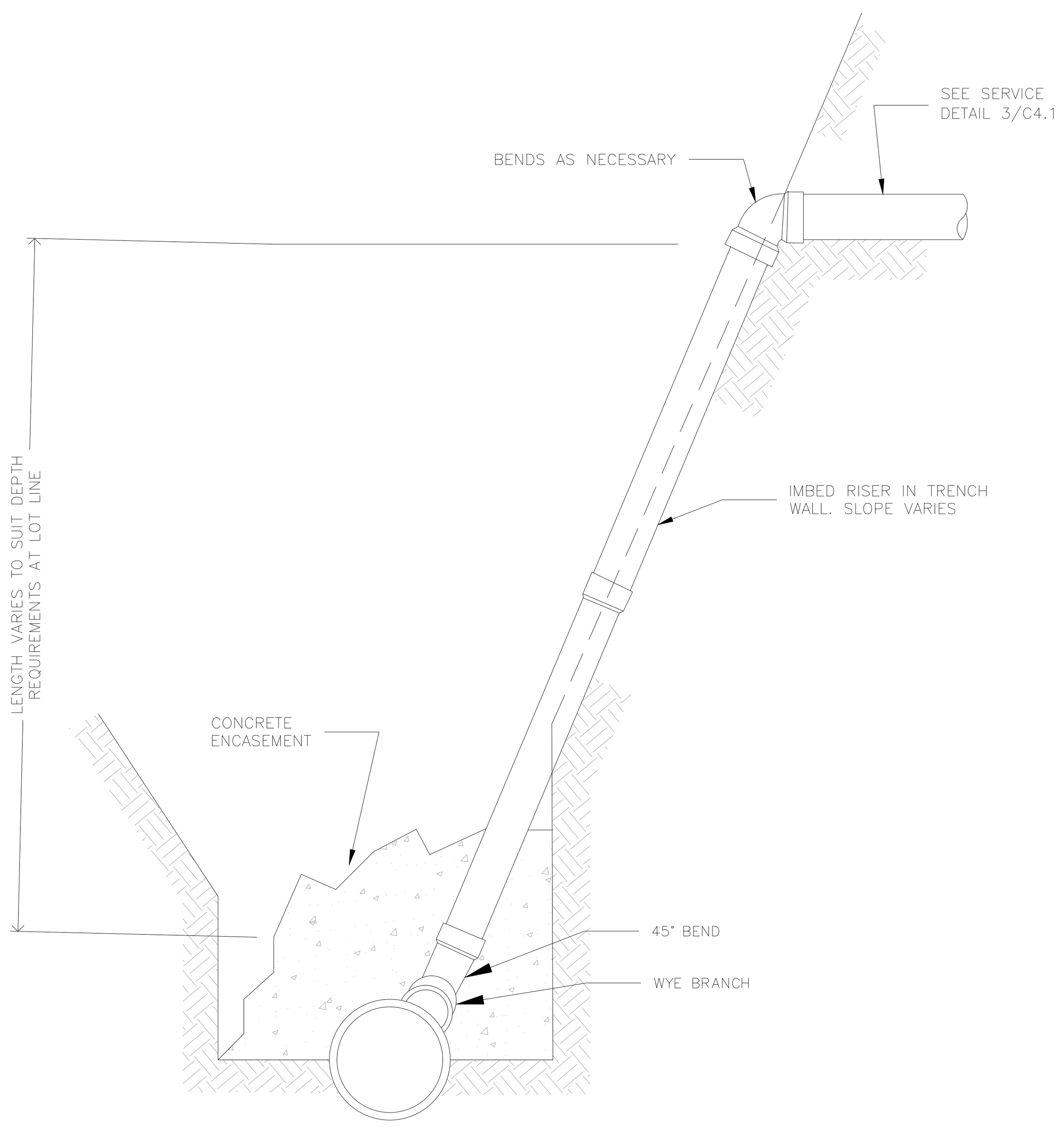

NOTES:

1. FOR SIZE AND TYPE OF MATERIALS, SEE PLANS.

1 SANITARY SERVICE
C4.1 NOT TO SCALE

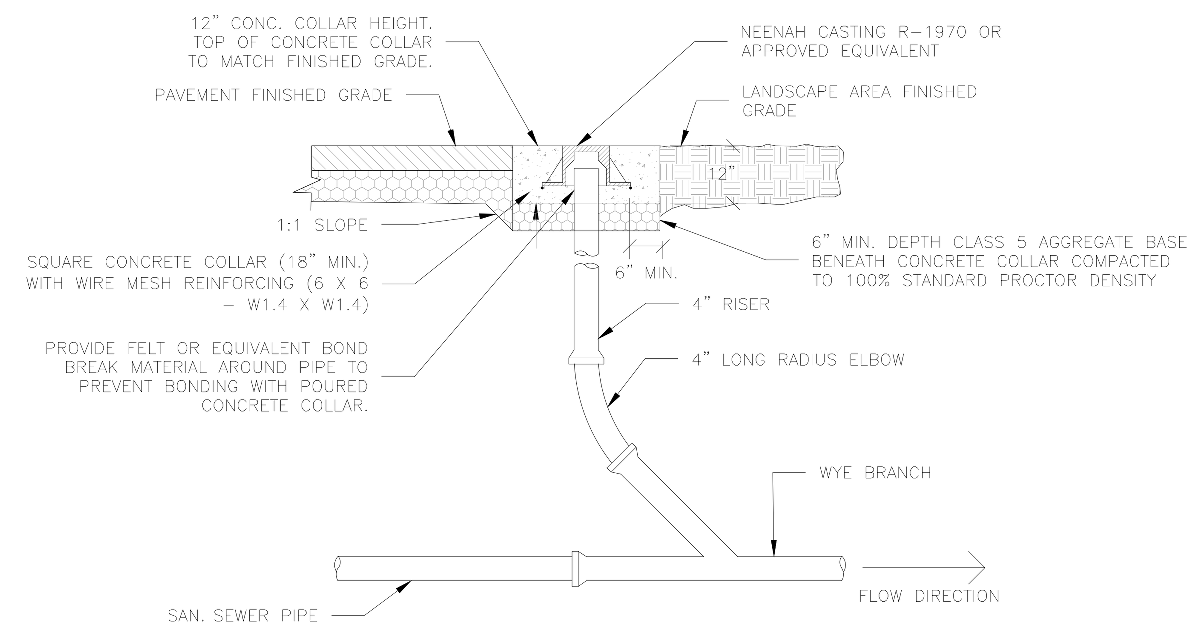

NOTES:

1. NO CONCRETE COLLAR IN LANDSCAPE AREAS.

2 SANITARY CLEANOUT
C4.1 NOT TO SCALE

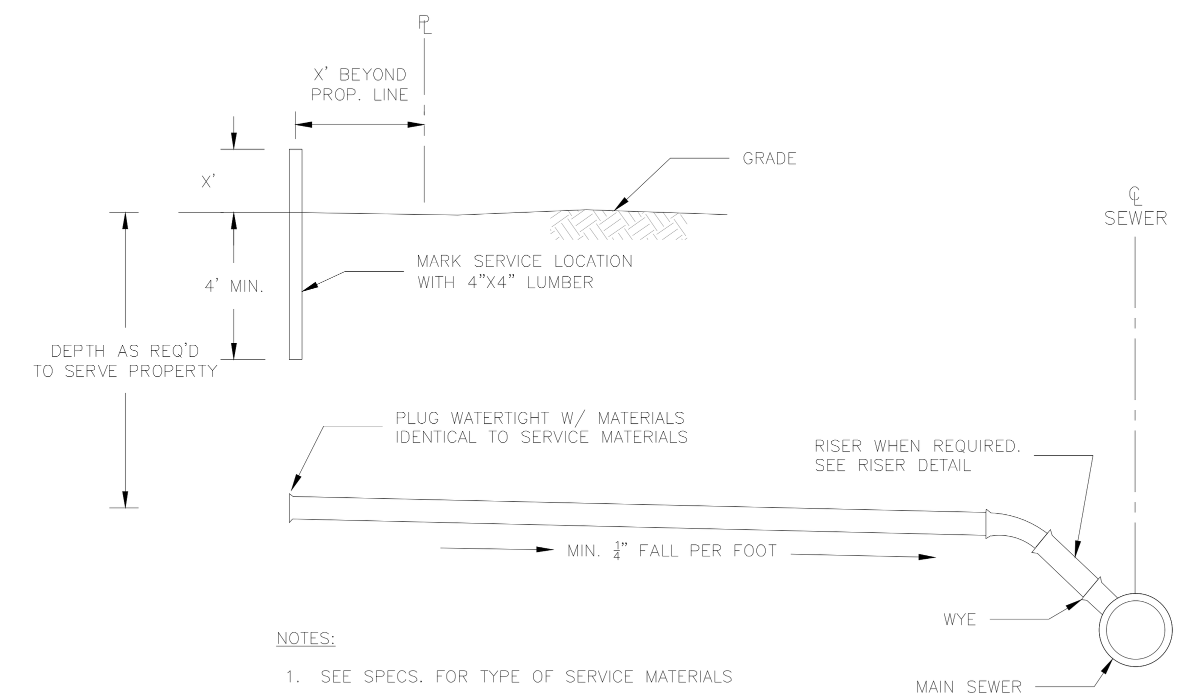

NOTES:

1. SEE SPECS. FOR TYPE OF SERVICE MATERIALS

3 SANITARY SEWER SERVICE
C4.1 NOT TO SCALE

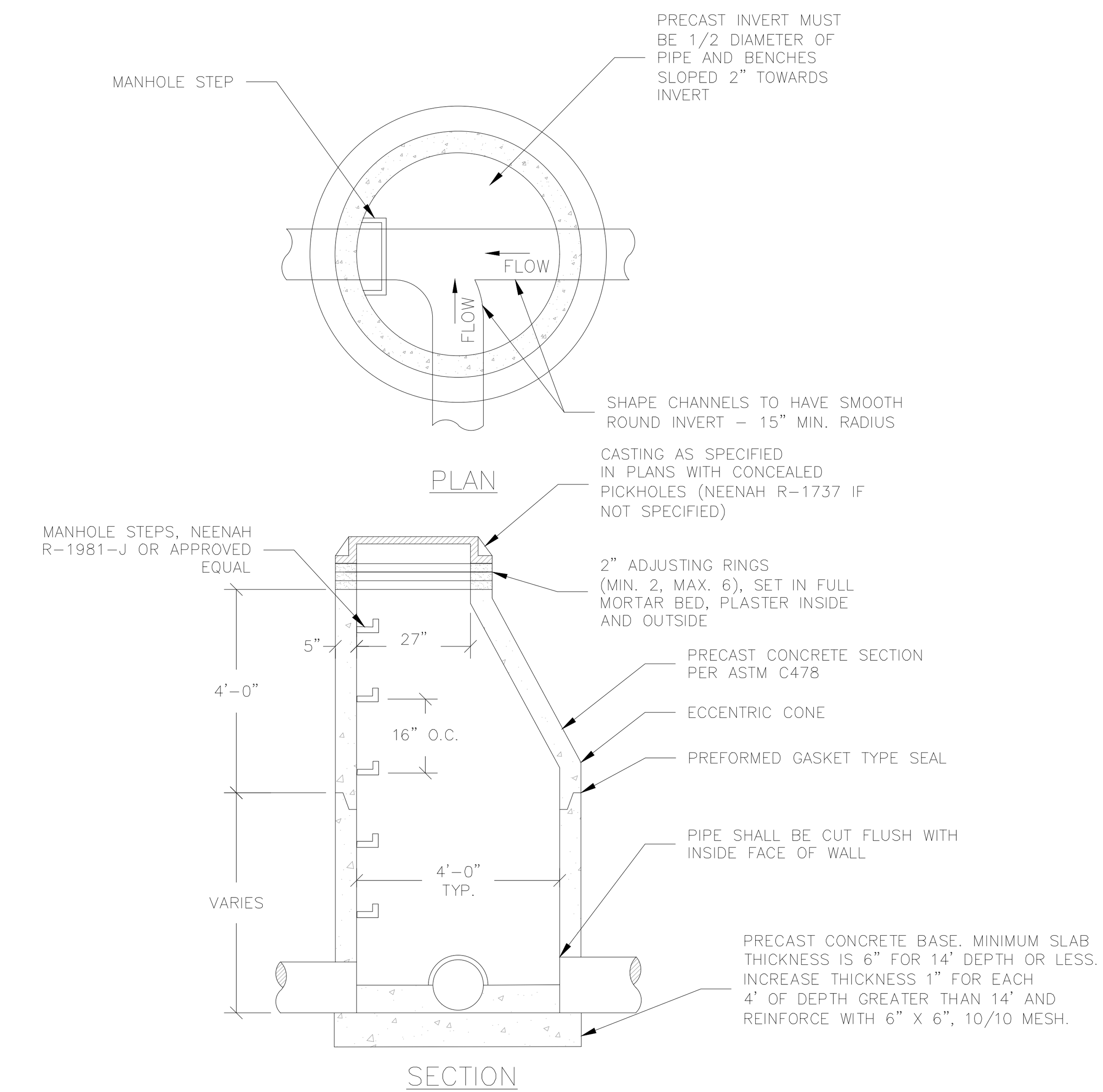

NOTES:

1. REINFORCING SHALL BE A MINIMUM OF A SINGLE LINE WIRE FABRIC HAVING AN AREA OF NOT LESS THAN 0.12 SQ. INCH PER FOOT OF HEIGHT.

4 SANITARY SEWER MANHOLE
C4.1 NOT TO SCALE

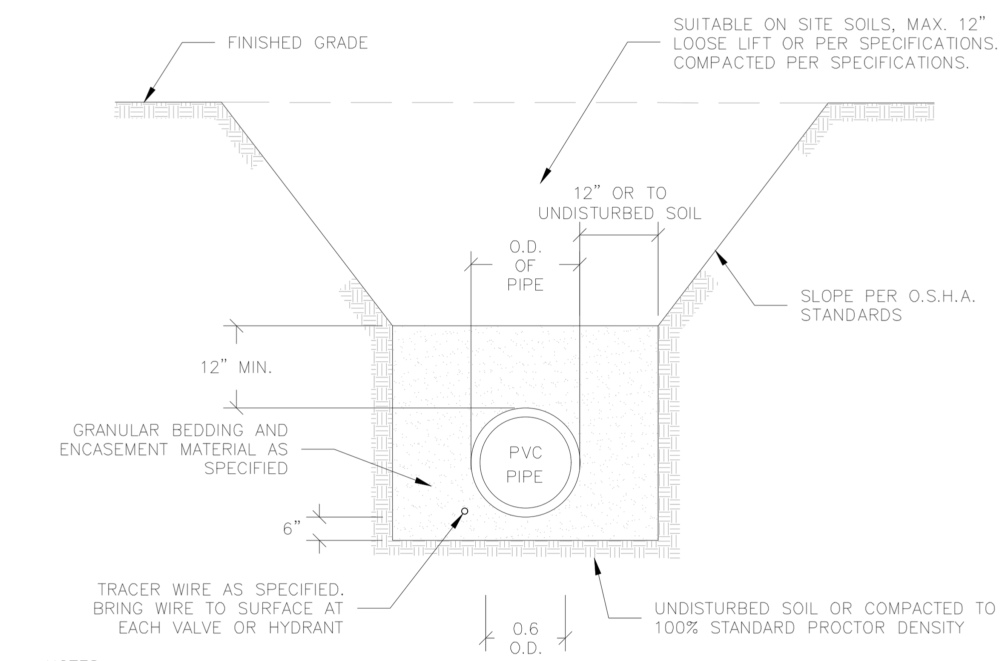

NOTES:

1. BACKFILL SHALL BE COMPACTED TO AT LEAST 95% STANDARD PROCTOR DENSITY IN LANDSCAPED AREAS, 100% IN PAVED AREAS OR WITHIN 5 FT. OF STRUCTURE.

5 PVC PIPE BEDDING
C4.1 NOT TO SCALE

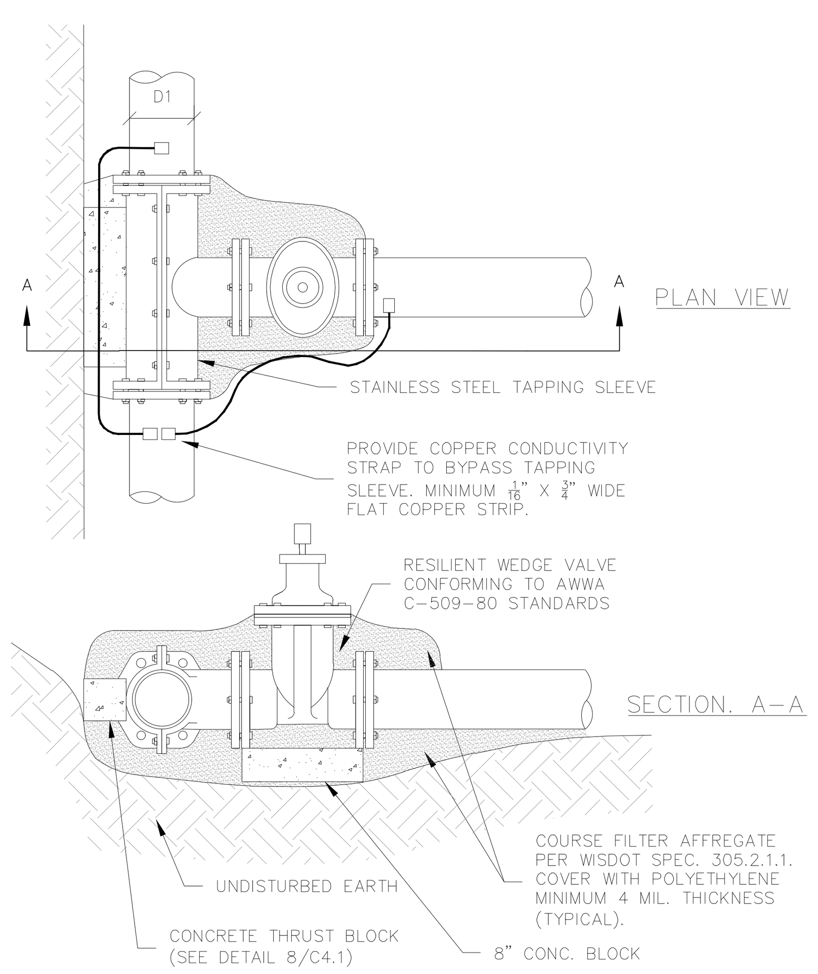

NOTES:

1. 7.5' MINIMUM COVER REQUIRED OVER TOP OF WATER MAIN.
2. ALL WATER MAIN BOLTS ARE TO BE CORE BLUE OR CITY APPROVED EQUAL

6 WATER SERVICE
C4.1 NOT TO SCALE

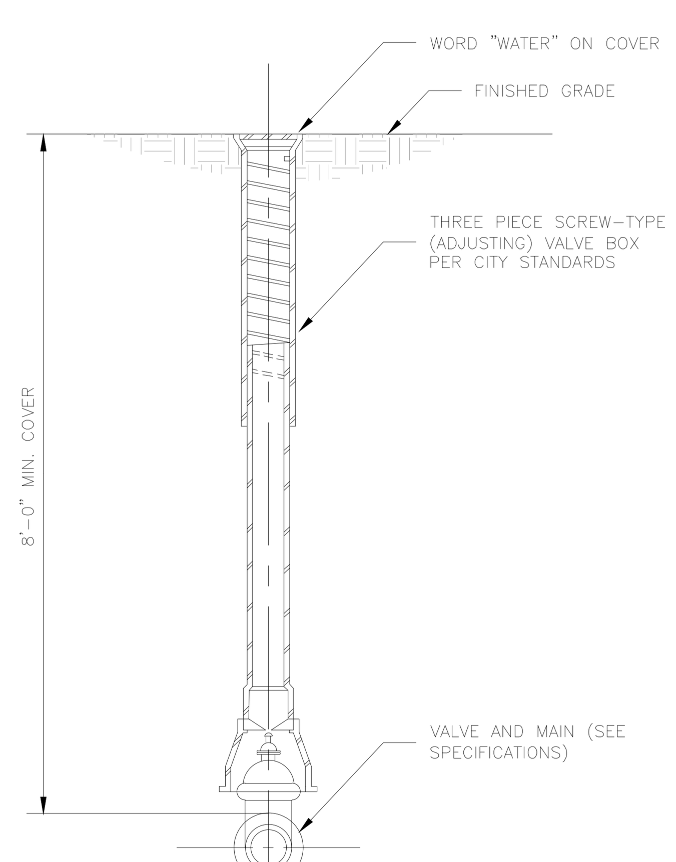

7 GATE VALVE AND BOX
C4.1 NOT TO SCALE

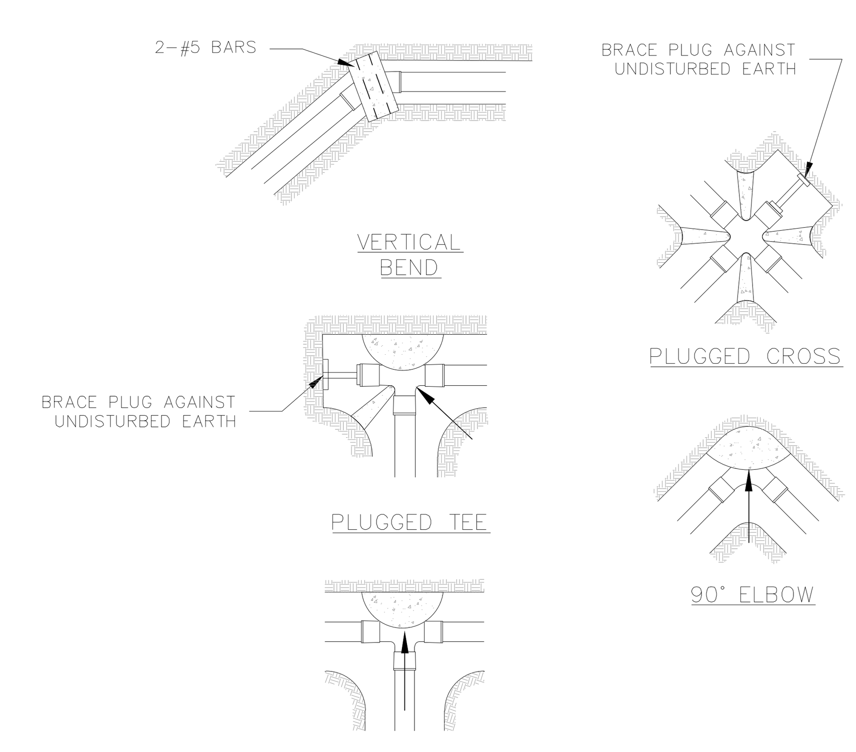

NOTES:

1. ALL BLOCKS BEAR AGAINST UNDISTURBED EARTH
2. ARROWS INDICATE DIRECTION OF THRUST
3. ALL BLOCKS TO BE 3000 P.S.I. POURED IN PLACE CONCRETE
4. ALL FITTINGS SHOWN IN PLAN VIEW EXCEPT VERTICAL BEND WHICH IS SHOWN IN ELEVATION VIEW
5. ALL WATERMAIN BENDS AND TEES SHALL BE THRUST BLOCKED AND MEGALUGGED

8 THRUST BLOCKS
C4.1 NOT TO SCALE

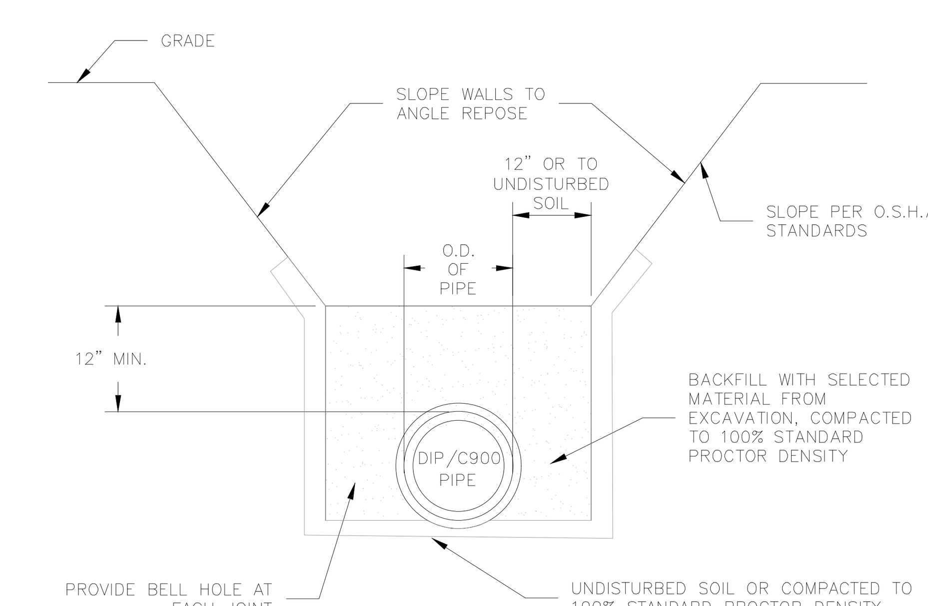

NOTES:

1. BACKFILL SHALL BE COMPACTED TO AT LEAST 95% STANDARD PROCTOR DENSITY IN LANDSCAPED AREAS, 100% IN PAVED AREAS OR WITHIN 5 FT. OF STRUCTURE

9 WATER DISTRIBUTION PIPE BEDDING
C4.1 NOT TO SCALE

AMI Consulting Engineers P.A.
3640 TALMAGE CIR. VADNAIS HEIGHTS
651.344.8783 - amiengineers.com
SUPERIOR - IRON RANGE

I HEREBY CERTIFY THAT THIS PLAN, SPECIFICATION, OR REPORT WAS PREPARED BY ME OR UNDER MY DIRECT SUPERVISION AND THAT I AM A DULY LICENSED PROFESSIONAL ENGINEER UNDER THE LAWS OF THE STATE OF MINNESOTA.

PRELIMINARY NOT FOR CONSTRUCTION

NAME:
SIGNATURE:
DATE:
LIC. NO. XXXXX

DATE:	REV:	DESCRIPTION	REV. BY:
3/21/2021	A	60% SITE PLAN	MHO
5/14/2021	B	ISSUED TO OWNER FOR REVIEW	MHO

ASHLAND ALVAREZ DEVELOPMENT
2200 LAKE SHORE DRIVE EAST
ASHLAND, WI 54806

UTILITY DETAILS

JOB No: 211012
DATE: XX/XX/XXXX
DRAWN BY: MTL
DESIGNED BY: BPK

SHEET:
C4.1

12/9/2018 11:37 AM Z:\2021\211012_C\Design\Engineering_Alvarez Development\Civil_Survey\3_CAD and Plot Files\s Plansheets\211012 - C4.0 - UTL.dwg

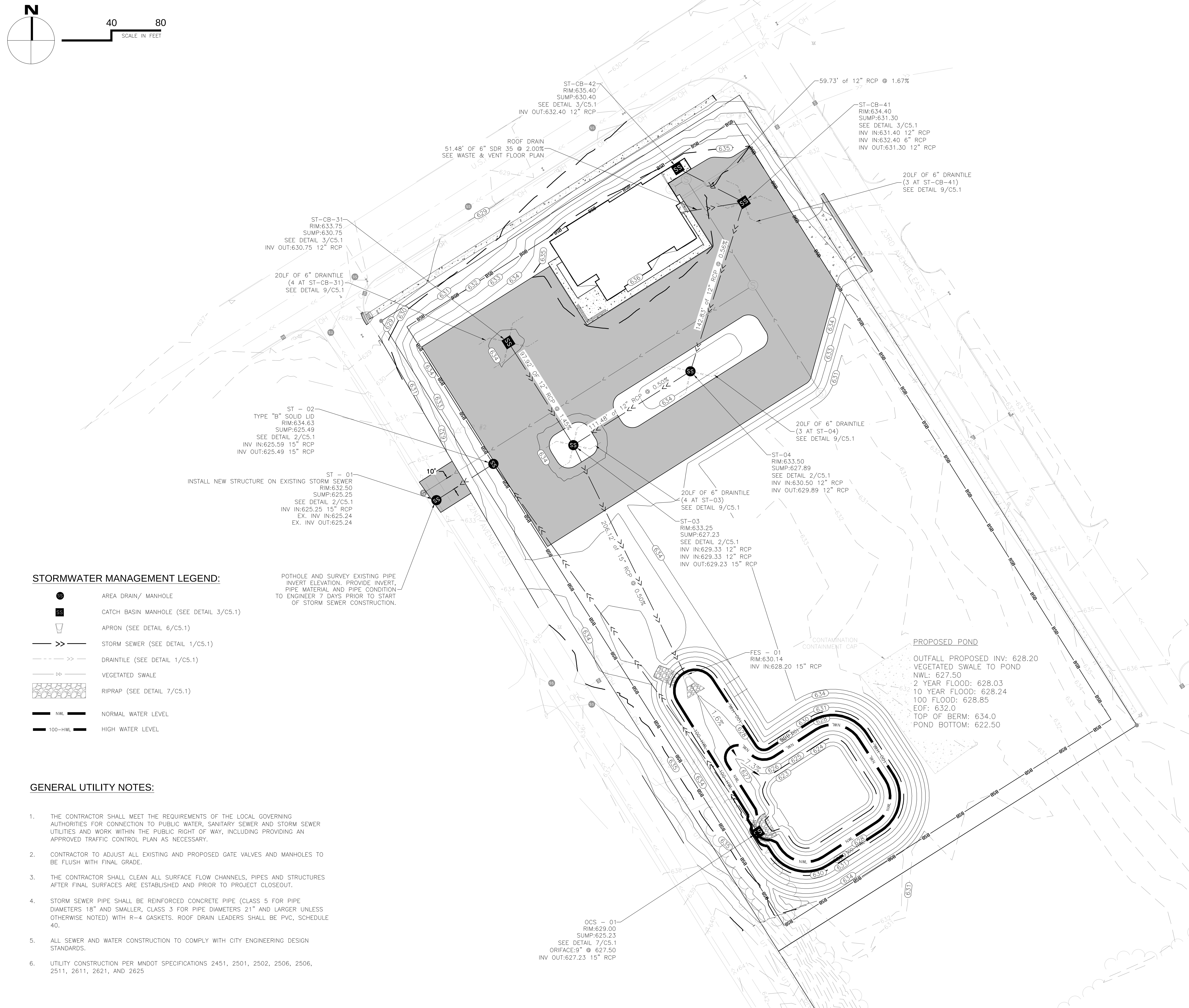

STORMWATER MANAGEMENT LEGEND:

●	AREA DRAIN/ MANHOLE
■	CATCH BASIN MANHOLE (SEE DETAIL 3/C5.1)
	APRON (SEE DETAIL 6/C5.1)
—— >> ——	STORM SEWER (SEE DETAIL 1/C5.1)
– – – >> – – –	DRAINTILE (SEE DETAIL 1/C5.1)
------ ▷▷ ------	VEGETATED SWALE
	RIPRAP (SEE DETAIL 7/C5.1)
—— NWL ——	NORMAL WATER LEVEL
—— 100-HWL ——	HIGH WATER LEVEL

GENERAL UTILITY NOTES:

1. THE CONTRACTOR SHALL MEET THE REQUIREMENTS OF THE LOCAL GOVERNING AUTHORITIES FOR CONNECTION TO PUBLIC WATER, SANITARY SEWER AND STORM SEWER UTILITIES AND WORK WITHIN THE PUBLIC RIGHT OF WAY, INCLUDING PROVIDING AN APPROVED TRAFFIC CONTROL PLAN AS NECESSARY.
2. CONTRACTOR TO ADJUST ALL EXISTING AND PROPOSED GATE VALVES AND MANHOLES TO BE FLUSH WITH FINAL GRADE.
3. THE CONTRACTOR SHALL CLEAN ALL SURFACE FLOW CHANNELS, PIPES AND STRUCTURES AFTER FINAL SURFACES ARE ESTABLISHED AND PRIOR TO PROJECT CLOSEOUT.
4. STORM SEWER PIPE SHALL BE REINFORCED CONCRETE PIPE (CLASS 5 FOR PIPE DIAMETERS 18" AND SMALLER, CLASS 3 FOR PIPE DIAMETERS 21" AND LARGER UNLESS OTHERWISE NOTED) WITH R-4 GASKETS. ROOF DRAIN LEADERS SHALL BE PVC, SCHEDULE 40.
5. ALL SEWER AND WATER CONSTRUCTION TO COMPLY WITH CITY ENGINEERING DESIGN STANDARDS.
6. UTILITY CONSTRUCTION PER MNDOT SPECIFICATIONS 2451, 2501, 2502, 2506, 2506, 2511, 2611, 2621, AND 2625

AMI
Consulting Engineers P.A.
3640 TALMAGE CIR. VADNAIS HEIGHTS
651.344.8783 - amiengineers.com
SUPERIOR - IRON RANGE

I HEREBY CERTIFY THAT THIS PLAN, SPECIFICATION, OR REPORT WAS PREPARED BY ME OR UNDER MY DIRECT SUPERVISION AND THAT I AM A DULY LICENSED PROFESSIONAL ENGINEER UNDER THE LAWS OF THE STATE OF MINNESOTA.

NAME: XXX

SIGNATURE:

DATE:

LIC. NO: XXXXX

PRELIMINARY NOT FOR CONSTRUCTION

DATE:	REV:	DESCRIPTION	REV. BY:
3/21/2021	A	60% SITE PLAN	MHO
5/14/2021	B	ISSUED TO OWNER FOR REVIEW	MHO

ASHLAND ALVAREZ DEVELOPMENT
2200 LAKE SHORE DRIVE EAST
ASHLAND, WI 54806

STORM PLAN

JOB No: 211012
DATE: XX/XX/XXXX
DRAWN BY: MTL
DESIGNED BY: BPK

SHEET:
C5.0

© COPYRIGHT - AMI CONSULTING ENGINEERS P.A. - 2006

© COPYRIGHT - AMI CONSULTING ENGINEERS P.A. 2026

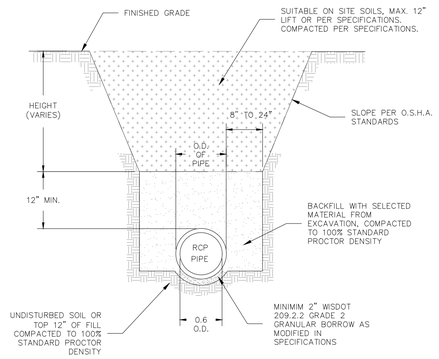

NOTES:
1. BACKFILL SHALL BE COMPACTED TO AT LEAST 95% STANDARD PROCTOR DENSITY IN LANDSCAPED AREAS, 100% IN PAVED AREAS AND WITHIN 5 FEET OF STRUCTURE.

1 / C5.1 RCP PIPE BEDDING
NOT TO SCALE

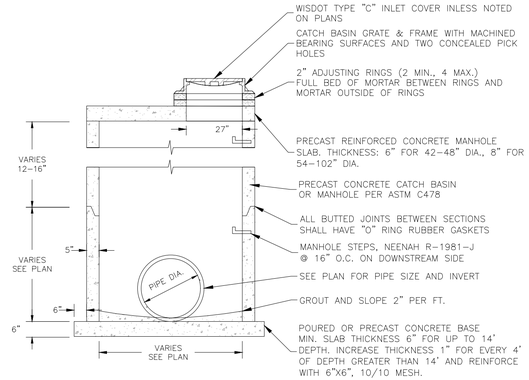

2 / C5.1 STORM SEWER TOP SLAB
NOT TO SCALE

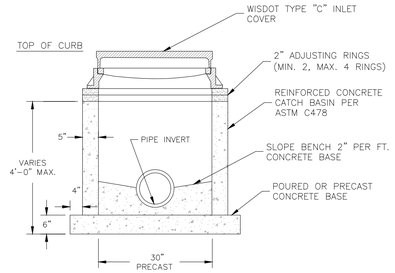

NOTES:
1. REINFORCING SHALL BE A MINIMUM OF A SINGLE LINE WIRE FABRIC HAVING AN AREA OF NOT LESS THAN 0.12 SQ. INCH PER FOOT OF HEIGHT

3 / C5.1 2' X 3' CATCH BASIN
NOT TO SCALE

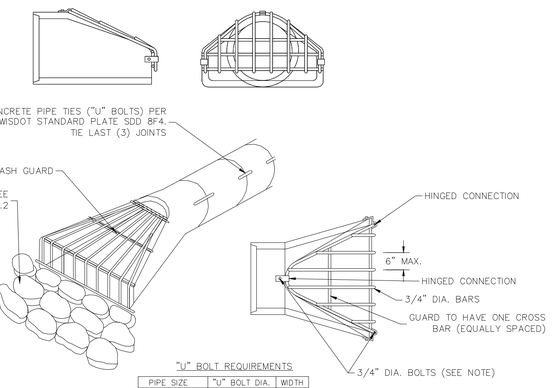

"U" BOLT REQUIREMENTS

PIPE SIZE	"U" BOLT DIA.	WIDTH
21"& LESS	1/2"	24"
24"TO 36"	5/8"	24"
42"TO 54"	3/4"	24"
60"& GREATER	1"	24"

NOTES:
1. TWO -"U" BOLT FASTENERS TO BE INSTALLED ACROSS EACH JOINT, ONE ON EACH SIDE OF THE PIPE AT 60" FROM THE TOP OF THE PIPE.
2. AFTER FABRICATION - HOT DIP GALVANIZE PER MNDOT 3392, OR APPROVED EQUAL. FASTEN FIRST THREE JOINTS.
3. BOLT HOLES (7/8") TO BE DRILLED IN CONCRETE AT INSTALLATION.
4. ALL APRON INLETS AND OUTLETS SHALL HAVE TRASH GUARDS AND RIPRAP, UNLESS INDICATED OTHERWISE.

4 / C5.1 RCP APRON WITH TRASH GUARD
NOT TO SCALE

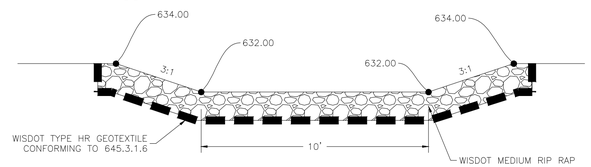

6 / C5.1 POND EMERGENCY OVERFLOW DETAIL
NOT TO SCALE

RIPRAP AT RCP OUTLETS										
		LIGHT RIPRAP			MEDIUM RIPRAP			HEAVY RIPRAP		
DIA. ROUND PIPE (IN.)	L (FT.)	GEOTEXTILE FILTER (SQ.YD.)	GRANULAR FILTER UNDER APRON (CU.YD.)	12" DEPTH RIPRAP (CU.YD.)	GEOTEXTILE FILTER (SQ.YD.)	GRANULAR FILTER UNDER APRON (CU.YD.)	18" DEPTH RIPRAP (CU.YD.)	GEOTEXTILE FILTER (SQ.YD.)	GRANULAR FILTER UNDER APRON (CU.YD.)	24" DEPTH RIPRAP (CU.YD.)
12	8	16.9	0.2	3.0	19.6	0.3	4.4	22.6	0.3	5.9
15	8	18.0	0.2	3.2	20.8	0.3	0.8	23.9	0.4	6.4
18	10	22.4	0.3	4.3	25.6	0.4	6.4	29.0	0.5	8.5
21	10	24.1	0.4	4.7	27.4	0.6	7.1	30.9	0.7	9.4
24	12	29.7	0.1	6.2	33.4	0.8	9.2	37.3	1.0	12.3
27	12	31.4	0.1	6.6	35.2	0.9	9.9	39.2	1.2	13.2
30	14	37.0	0.8	8.2	41.6	1.1	12.3	46.0	1.5	16.4
36	16	45.0	1.1	10.6	50.5	1.6	15.8	55.4	2.1	21.1
42	18	52.0	1.2	12.5	57.8	1.7	18.7	63.0	2.3	24.9
48	20	61.1	1.5	14.8	66.5	2.2	22.2	72.0	2.9	29.6

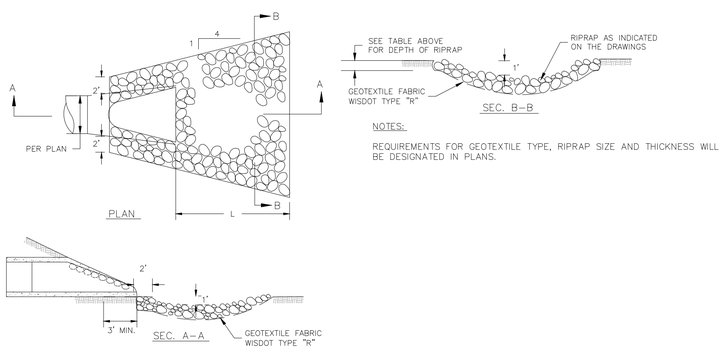

NOTES:

REQUIREMENTS FOR GEOTEXTILE TYPE, RIPRAP SIZE AND THICKNESS WILL BE DESIGNATED IN PLANS.

5 / C5.1 RIPRAP AT RCP APRON
NOT TO SCALE

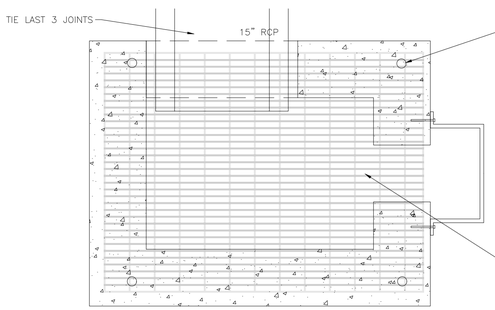

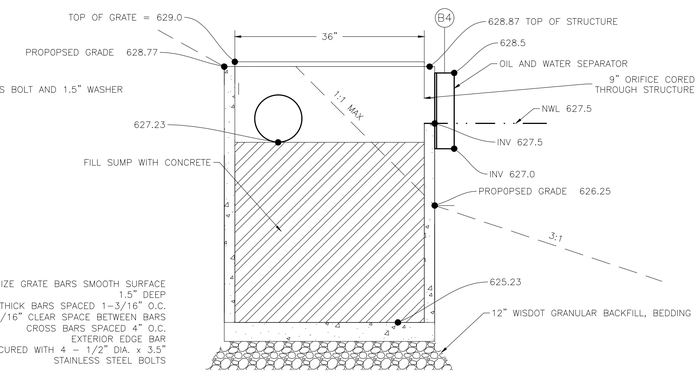

7 / C5.1 2'x3' - OUTLET CONTROL STRUCTURE DETAIL
NOT TO SCALE

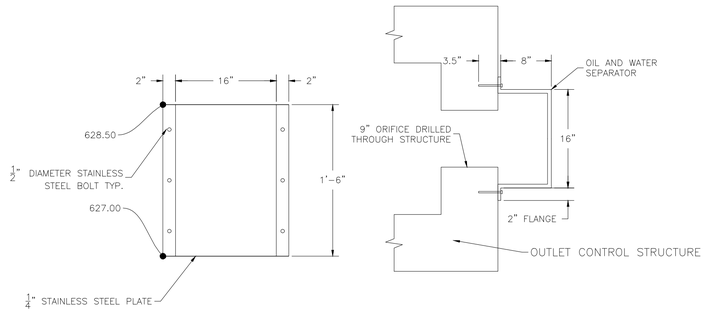

8 / C5.1 POND OIL AND WATER SEPARATOR DETAIL
NOT TO SCALE

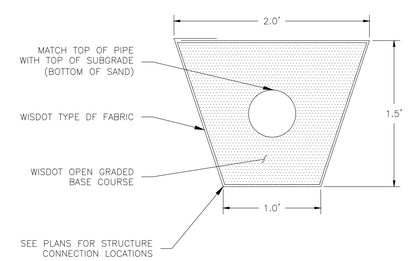

9 / C5.1 DRAINTILE
NOT TO SCALE, SEE CX.X

AMI Consulting Engineers P.A.
3640 TALMAGE CIR. VADNAIS HEIGHTS
651.344.8783 - amiengineers.com
SUPERIOR - IRON RANGE

PRELIMINARY NOT FOR CONSTRUCTION

I HEREBY CERTIFY THAT THE PLAN, SPECIFICATION, OR REPORT WAS PREPARED BY ME OR UNDER MY DIRECT SUPERVISION AND THAT I AM A DULY LICENSED PROFESSIONAL ENGINEER UNDER THE LAWS OF THE STATE OF MINNESOTA.

SIGNATURE:
NAME:
DATE:
REG. NO.

DATE:	REV:	DESCRIPTION:	REV. BY:
3/21/2021	A	60% SITE PLAN	MRO
5/14/2021	B	ISSUED TO OWNER FOR REVIEW	MRO

ASHLAND ALVAREZ DEVELOPMENT
2200 LAKE SHORE DRIVE EAST
ASHLAND, WI 54806

C5.1 - STORM DETAILS

JOB No: 211012
DATE: XX/XX/XXXX
DRAWN BY: MTL
DESIGNED BY: BPK

SHEET: C5.1

12/9/2021 8:13:37 AM Z:\2021\211012\C3Design\Engineering_Alvarez Development\CAD_Survey\3_CAD and Plan Files\e Plansheets\211012-C3D-STORM.dwg

© COPYRIGHT - AMI CONSULTING ENGINEERS P.A. - 2006

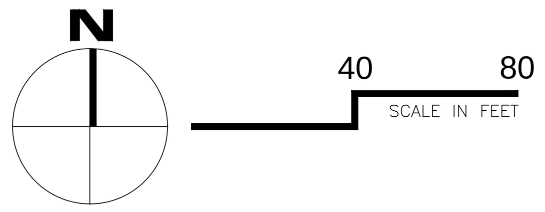

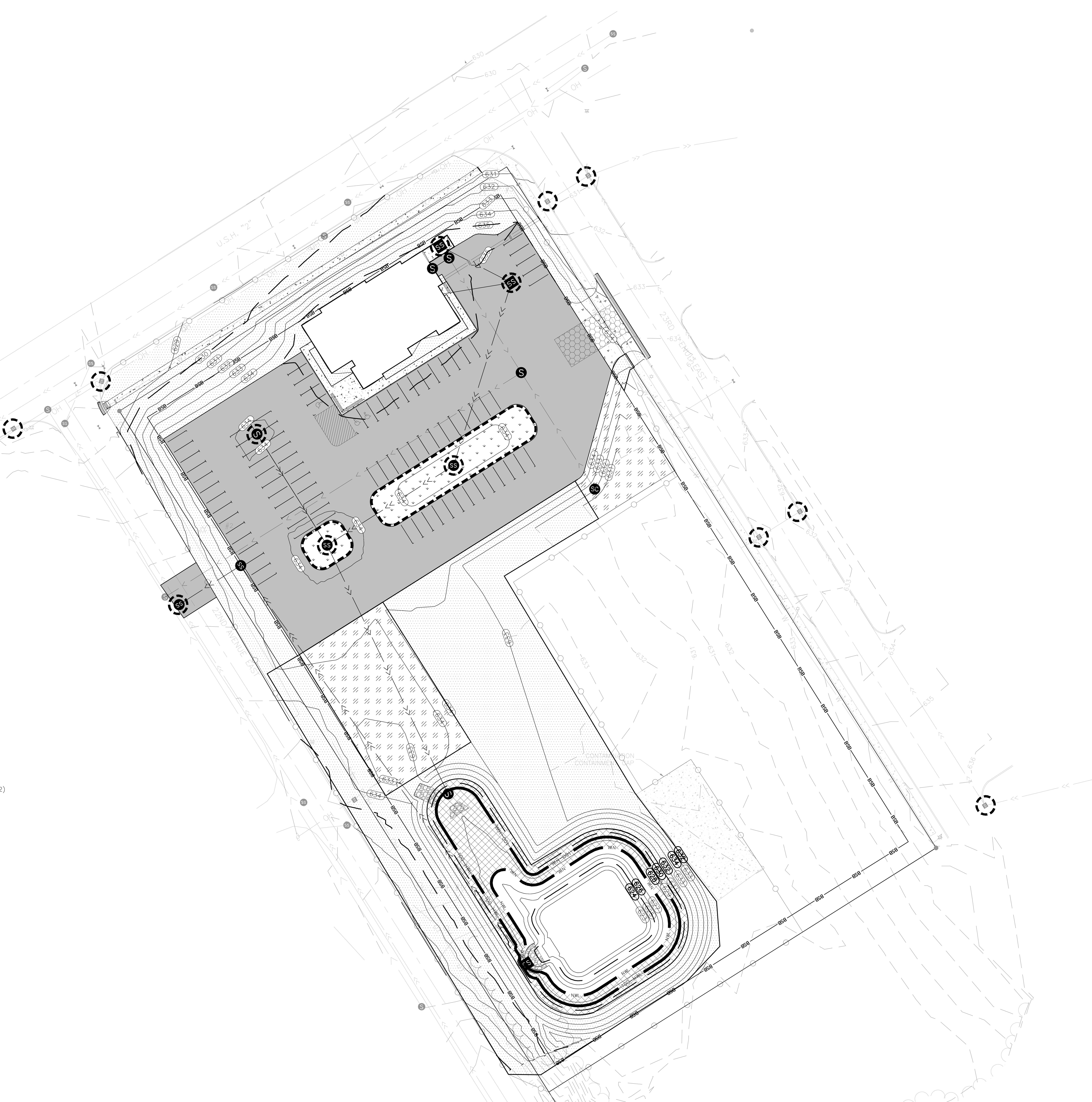

SWPPP LEGEND:

Symbol	Description
(SS circle)	AREA DRAIN/ MANHOLE
(SS square)	CATCH BASIN MANHOLE
(apron)	APRON
(line)	SILT FENCE (SEE WISDOT SDD 8e9 SHEET C6.2)
(dashed circle)	INLET PROTECTION (SEE WISDOT SDD 8e10 SHEET C6.2)
(heavy dash)	BIO ROLL (SEE DETAIL 1/C6.2)
(line)	VEGETATED SWALE
(hatch)	RIPRAP (SEE DETAIL 5/C5.1)
(hatch)	ROCK CONSTRUCTION ENTRANCE (SEE WISDOT SDD 8e14 SHEET C6.2)
(hatch)	EROSION CONTROL BLANKET
(hatch)	PROPOSED SEED & MULCH
(hatch)	VEGETATION ZONE
(hatch)	SALT TOLERANT VEGETATION ZONE
NWL	NORMAL WATER LEVEL
100-HWL	HIGH WATER LEVEL

AMI Consulting Engineers P.A.
3640 TALMAGE CIR. VADNAIS HEIGHTS
651.344.8783 - amiengineers.com
SUPERIOR - IRON RANGE

I HEREBY CERTIFY THAT THIS PLAN, SPECIFICATION, OR REPORT WAS PREPARED BY ME OR UNDER MY DIRECT SUPERVISION AND THAT I AM A DULY LICENSED PROFESSIONAL ENGINEER UNDER THE LAWS OF THE STATE OF MINNESOTA

NAME: XXXXX
SIGNATURE:
DATE:
LIC. No: XXXXX

PRELIMINARY NOT FOR CONSTRUCTION

DATE:	REV:	DESCRIPTION	REV. BY:
3/21/2021	A	60% SITE PLAN	MHO
5/14/2021	B	ISSUED TO OWNER FOR REVIEW	MHO

ASHLAND ALVAREZ DEVELOPMENT

2200 LAKE SHORE DRIVE EAST
ASHLAND, WI 54806

SWPPP PLAN

JOB No: 211012
DATE: XX/XX/XXXX
DRAWN BY: MTL
DESIGNED BY: BPK

SHEET:
C6.0

© COPYRIGHT ~ AMI CONSULTING ENGINEERS P.A. : 2006

REGULATORY CONTEXT AND COMPLIANCE:

1. TEMPORARY EROSION AND SEDIMENT CONTROL MEASURES FOR THIS PROJECT INCLUDE SILT FENCE, COIR LOGS, SEDIMENT CONTROL LOGS A ROCK CONSTRUCTION ENTRANCE, STORM DRAIN INLET PROTECTION, AND TEMPORARY SEED, MULCH AND SOD, AS NEEDED.
2. PERMANENT EROSION AND SEDIMENT CONTROL MEASURES INCLUDE EROSION CONTROL BLANKET, SWALES, POROUS PAVERS, BERMS AND VEGETATION.
3. PERMANENT STORMWATER BMP'S INCLUDE: POROUS PAVERS, AND VEGETATION SEE THE PROJECT SWMP REPORT FOR DETAILS. MAINTAIN BMP'S TO ENSURE PERFORMANCE AND COMPLY WITH MAINTENANCE AS REQUIRED.
4. PLACEMENT OF FILL IN WATERS OF THE STATE: THE PROPOSED PROJECT **WILL NOT** IMPACT WETLANDS.
5. THE PROJECT'S STORMWATER DISCHARGE IS NOT SUBJECT TO ADDITIONAL REGULATIONS DUE TO ANY OF THE FOLLOWING: KARST AREAS, DRINKING WATER SUPPLY MANAGEMENT AREA, ENDANGERED OR THREATENED SPECIES, OTHER FORMAL ENVIRONMENTAL REVIEWS.
6. THE PROJECT'S STORMWATER DISCHARGE IS NOT ANTICIPATED TO IMPACT ANY OF THE FOLLOWING; OUTSTANDING RESOURCE VALUE WATERS, OR EXCEPTIONAL RESOURCE WATER, TROUT WATERS, CALCEROUS FENS, DNR PUBLIC WATERS "WORK IN WATER RESTRICTIONS", PROPERTIES LISTED BY THE NATIONAL REGISTER OF HISTORIC PLACES OR ARCHEOLOGICAL SITES.

GENERAL PHASING AND SEQUENCE OF CONSTRUCTION:

1. CONTRACTOR AND OWNER SHALL APPLY FOR AND OBTAIN AN WPDES PERMIT PRIOR TO BEGINNING CONSTRUCTION.
2. TEMPORARY EROSION AND SEDIMENT CONTROLS INCLUDING THE ROCK CONSTRUCTION ENTRANCE, STORM DRAIN INLET PROTECTION AND SILT FENCE SHALL BE INSTALLED PRIOR TO LAND DISTURBING ACTIVITIES IN THE AREAS WHICH THEY PROTECT.
3. PERFORM CLEARING AND GRUBBING AND SITE REMOVALS WORK.
4. CONSTRUCT THE DETENTION BASIN AND OUTLET FIRST FOR USE DURING CONSTRUCTION. BASIN MAY BE DUG BELOW PLAN DEPTH FOR TEMPORARY SEDIMENT REMOVAL, IF NECESSARY. STABILIZE THE BASIN WITH TEMPORARY SEED. PROTECT THE OUTLET FROM SEDIMENT TO PREVENT SEDIMENT DISCHARGE TO THE WETLAND. CLEAN AND MAINTAIN BASIN THROUGHOUT CONSTRUCTION.
5. PERFORM EARTHWORK FOR BUILDING AND PARKING LOT CONSTRUCTION.
6. PROTECT NEW STORM SEWER INLETS.
7. PROVIDE PERMANENT STABILIZATION FOR LAWN AND LANDSCAPED AREAS AS SOON AS POSSIBLE FOLLOWING GRADING.
8. FOLLOWING INSTALLATION OF PAVEMENT, REMOVE ALL ACCUMULATED SEDIMENT FROM DETENTION BASINS AND RESTORE PLAN GRADES AND PERMANENTLY STABILIZE THE DISTURBED AREA.
9. REMOVE SEDIMENT, CONTAMINANTS AND DEBRIS FROM THE PERMANENT BMPS AFTER PERMANENT STABILIZATION OF THE ENTIRE CONTRIBUTING DRAINAGE AREA.
10. SUBMIT NOTICE OF TERMINATION (NOT) TO WISCONSIN DNR WITHIN 45 DAYS OF ACHIEVING FINAL STABILIZATION.
    - 10.1. EROSION AND SEDIMENT CONTROL BMPS ARE TO REMAIN IN PLACE UNTIL N.O.T IS GRANTED BY THE CITY OF ASHLAND.
    - 10.2. ONCE THE SITE HAS REACHED 70% GOOD VEGETATIVE COVER SET UP N.O.T INSPECTION WITH ENGINEER. ENGINEER WILL NEED BE ALLOWED 7 DAYS TO MAKE INSPECTION AND NOTIFY CONTRACTOR OF A ACCEPTANCE OR DENIAL.
    - 10.3. ONCE INSPECTION IS ACCEPTED AND CITY HAS ISSUED N.O.T (VERBALLY TO CONTRACTOR/OWNER WITH LETTER TO FOLLOW), BMPS SHALL BE REMOVED AND NO OTHER LAND DISTURBING ACTIVITY RELATED TO THE PROJECT CAN OCCUR.

EROSION PREVENTION NOTES:

1. PHASED CONSTRUCTION SHOULD BE USED TO THE EXTENT PRACTICAL OR AS INDICATED IN THE PLANS TO MINIMIZE EXPOSED SOILS.
2. AREAS NOT TO BE DISTURBED SHOULD BE DELINEATED WITH FLAGS, STAKES, SILT FENCE, ETC. PRIOR TO WORK BEGINNING.
3. MINIMIZE THE NEED FOR DISTURBANCE OF STEEP SLOPE AREAS AND USE PROPER PHASING AND STABILIZATION PRACTICES (I.E. SLOPE DRAINING AND TERRACING) FOR THOSE AREAS WHICH MUST BE DISTURBED.
4. PERFORM ALL EROSION CONTROL PRACTICES AND SEQUENCE CONSTRUCTION IN ACCORDANCE WISCONSIN DNR STANDARDS. THESE STANDARDS CAN BE FOUND AT DEPARTMENT STORM WATER INTERNET SITE AT: HTTPS://DNR.WISCONSIN.GOV/TOPIC/STORMWATER/STANDARDS/CONST_STANDARDS.HTML, OR CONTACT THE DEPARTMENT STORM WATER PROGRAM IN THE BUREAU OF WATERSHED MANAGEMENT AT (608) 267-7694 TO GET INFORMATION ON HOW TO OBTAIN THE EROSION AND SEDIMENT CONTROL TECHNICAL STANDARDS.
5. INSTALL TEMPORARY EROSION PREVENTION DEVICES AT THE LOCATIONS SHOWN ON THE PLANS PRIOR TO BEGINNING LAND DISTURBING ACTIVITIES.
6. MAINTAIN, INSPECT AND REPAIR ALL TEMPORARY EROSION PREVENTION MEASURES IN PLACE UNTIL THE CONTRIBUTING DRAINAGE AREA HAS BEEN STABILIZED.
7. PROVIDE ADDITIONAL EROSION CONTROL, WHICH MAY NOT BE SHOWN ON THE DRAWINGS, CONSISTENT WITH THE MEANS, METHODS AND SEQUENCE OF CONSTRUCTION IN ACCORDANCE WITH PERMIT REQUIREMENTS AND AUTHORITIES HAVING JURISDICTION.
8. STABILIZE ALL EXPOSED AREAS (INCLUDING STOCKPILES) AGAINST EROSION DUE TO RAIN, WIND AND RUNNING WATER. STABILIZATION MUST BE INITIATED IMMEDIATELY TO LIMIT SOIL EROSION BUT IN NO CASE COMPLETED LATER THAN:

   FOURTEEN (14) DAYS
9. AFTER THE CONSTRUCTION ACTIVITY IN THAT PORTION OF THE SITE HAS TEMPORARILY OR PERMANENTLY CEASED.
10. REPAIR ERODED AREAS IMMEDIATELY.
11. FOR PUBLIC WATERS WITH DNR "WORK IN WATER RESTRICTIONS" DURING SPECIFIED FISH SPAWNING TIME FRAMES, ALL EXPOSED SOIL AREAS THAT ARE WITHIN 200 FEET OF THE WATER'S EDGE, AND DRAIN TO THESE WATERS MUST COMPLETE THE STABILIZATION ACTIVITIES WITHIN 24 HOURS DURING THE RESTRICTION PERIOD.
12. TEMPORARY STOCKPILES WITHOUT SIGNIFICANT SILT, CLAY OR ORGANIC COMPONENTS (I.E. CLEAN AGGREGATE STOCKPILES, DEMOLITION CONCRETE STOCKPILES, SAND STOCKPILES, ETC.) AND THE CONSTRUCTED BASE COMPONENTS OF ROADS, PARKING LOTS AND SIMILAR SURFACES ARE EXEMPT FROM THIS REQUIREMENT BUT MUST BE IN COMPLIANCE WITH THE PERMIT.
13. STABILIZE THE NORMAL WETTED PERIMETER OF ANY TEMPORARY OR PERMANENT DRAINAGE DITCH OR SWALE THAT DRAINS FROM ANY PORTION OF THE CONSTRUCTION SITE, OR DIVERTS WATER AROUND THE SITE, WITHIN 200 LINEAL FEET FROM THE PROPERTY EDGE, OR FROM THE POINT OF DISCHARGE INTO ANY SURFACE WATER. STABILIZATION OF THE LAST 200 LINEAL FEET MUST BE COMPLETED WITHIN 24 HOURS AFTER CONNECTING TO A SURFACE WATER OR PROPERTY EDGE. STABILIZE REMAINING PORTIONS OF DITCHES AND SWALES PER THE ABOVE.
14. TEMPORARY OR PERMANENT DITCHES OR SWALES BEING USED AS A SEDIMENT CONTAINMENT SYSTEM (WITH PROPER DITCH CHECKS) DURING CONSTRUCTION DO NOT NEED TO BE STABILIZED DURING THE TEMPORARY PERIOD OF ITS USE AS A SEDIMENT CONTAINMENT SYSTEM. THESE AREAS MUST BE STABILIZED WITHIN 24 HOURS AFTER NO LONGER BEING USED AS A SEDIMENT CONTAINMENT SYSTEM.
15. APPLYING MULCH, HYDROMULCH, TACKIFIER, POLYACRYLAMIDE OR SIMILAR EROSION PREVENTION PRACTICES IS NOT ACCEPTABLE STABILIZATION IN ANY PART OF A TEMPORARY OR PERMANENT DRAINAGE DITCH OR SWALE.
16. PIPE OUTLETS MUST BE PROVIDED WITH TEMPORARY OR PERMANENT ENERGY DISSIPATION WITHIN 24 HOURS AFTER CONNECTION TO A SURFACE WATER.
17. SOD AND/OR SEED, FERTILIZER AND MULCH SHALL BE PLACED AS INDICATED IN THE PLANS AND PROJECT SPECIFICATIONS.
18. UNLESS INFEASIBLE, DIRECT DISCHARGES FROM BMPS TO VEGETATED AREAS OF THE SITE INCLUDING VELOCITY DISSIPATION DEVICES.
19. CONTRACTOR SHALL TAKE ALL STEPS NECESSARY TO PREVENT EXCESS SOIL EROSION. TEMPORARY DEVICES SHALL BE MAINTAINED AND LEFT IN PLACE UNTIL PERMANENT MEASURES ARE IN PLACE. REMOVE TEMPORARY EROSION CONTROL DEVICES AFTER THE ADJACENT FINAL SURFACES ARE PERMANENTLY ESTABLISHED. COORDINATE REMOVAL WITH PERMANENT RESTORATION OF ALL AREAS OCCUPIED BY TEMPORARY DEVICES.
20. PROVIDE ADDITIONAL EROSION CONTROL, WHICH MAY NOT BE SHOWN ON THE DRAWINGS, CONSISTENT WITH THE MEANS, METHODS AND SEQUENCE OF CONSTRUCTION IN ACCORDANCE WITH PERMIT REQUIREMENTS AND AUTHORITIES HAVING JURISDICTION.
21. MAINTAINING HEALTHY VEGETATION WILL REDUCE THE OCCURRENCE OF EROSION IN LANDSCAPED AREAS. PROMPTLY REPAIR ANY LANDSCAPED AREAS THAT MAY BECOME DAMAGED, AND REPLACE VEGETATION THAT DOES NOT SURVIVE.

SEDIMENT CONTROL NOTES:

1. EMPLOY SEDIMENT CONTROL PRACTICES AS NECESSARY TO MINIMIZE SEDIMENT FROM ENTERING SURFACE WATERS, INCLUDING CURB AND GUTTER SYSTEMS AND STORM SEWER INLETS.
2. INSTALL TEMPORARY SEDIMENT CONTROL DEVICES AT THE LOCATIONS SHOWN ON THE PLANS. PRACTICES MUST BE ESTABLISHED ON ALL DOWN GRADIENT PERIMETERS AND BE LOCATED UPGRADIENT OF ANY BUFFER ZONES. PERIMETER SEDIMENT CONTROL DEVICES MUST BE IN PLACE BEFORE ANY UPGRADIENT LAND-DISTURBING ACTIVITIES BEGIN. THESE DEVICES SHALL REMAIN IN PLACE UNTIL FINAL STABILIZATION HAS BEEN ESTABLISHED.
3. RE-INSTALL ALL SEDIMENT CONTROL DEVICES THAT HAVE BEEN ADJUSTED OR REMOVED TO ACCOMMODATE SHORT-TERM ACTIVITIES SUCH AS CLEARING AND GRUBBING, OR PASSAGE OF VEHICLES, IMMEDIATELY AFTER THE SHORT-TERM ACTIVITY HAS BEEN COMPLETED. COMPLETE ANY SHORT-TERM ACTIVITY AS QUICKLY AS POSSIBLE. RE-INSTALL DEVICES BEFORE THE NEXT PRECIPITATION EVENT EVEN IF THE SHORT-TERM ACTIVITY IS NOT COMPLETE.
4. ALL STORM DRAIN INLETS MUST BE PROTECTED BY APPROPRIATE BMPS DURING CONSTRUCTION UNTIL ALL SOURCES WITH POTENTIAL FOR DISCHARGING TO THE INLET HAVE BEEN STABILIZED. INLET PROTECTION MAY BE REMOVED FOR A PARTICULAR INLET IF A SPECIFIC SAFETY CONCERN (I.E. STREET FLOODING/FREEZING) HAS BEEN IDENTIFIED. DOCUMENT THE NEED FOR THE REMOVAL IN THE SWPPP.
5. TEMPORARY SOIL STOCKPILES MUST HAVE SILT FENCE OR OTHER EFFECTIVE SEDIMENT CONTROLS, AND CANNOT BE PLACED IN ANY NATURAL BUFFERS, SURFACE WATERS, INCLUDING STORMWATER CONVEYANCES SUCH AS CURB AND GUTTER SYSTEMS, OR CONDUITS AND DITCHES UNLESS THERE IS A BYPASS IN PLACE FOR RUNOFF.
6. WHERE VEHICLE AND EQUIPMENT TRAFFIC LEAVE THE SITE (OR ONTO PAVED ROADS WITHIN THE SITE):

   INSTALL A VEHICLE TRACKING BMP TO MINIMIZE TRACK OUT OF SEDIMENT FROM THE ACTIVE CONSTRUCTION SITE.

   USE STREET SWEEPING IF SUCH VEHICLE TRACKING BMPS ARE NOT ADEQUATE TO PREVENT SEDIMENT FROM BEING TRACKED ONTO PAVEMENTS.
7. INSTALL AND MAINTAIN TEMPORARY SEDIMENTATION BASINS AS REQUIRED.
8. MINIMIZE SOIL COMPACTION AND, UNLESS INFEASIBLE, PRESERVE TOPSOIL. MINIMIZING COMPACTION IS NOT REQUIRED WHERE THE FUNCTION OF A SPECIFIC AREA OF THE SITE DICTATES THAT IT BE COMPACTED.
9. PRESERVE A 50 FOOT NATURAL BUFFER OR (IF A BUFFER IS INFEASIBLE ON THE SITE) PROVIDE REDUNDANT SEDIMENT CONTROLS WHEN A SURFACE WATER IS LOCATED WITHIN 50 FEET OF THE PROJECT'S EARTH DISTURBANCES AND STORMWATER FLOWS TO THE SURFACE WATER.
10. IF THE CONTRACTOR INTENDS TO USE POLYMERS, FLOCCULANTS OR OTHER SEDIMENTATION TREATMENT CHEMICALS, COMPLY WITH THE MINIMUM REQUIREMENTS UNDER THE PERMIT.
11. SOME CONTROL MEASURES SUCH AS DITCH CHECKS AND TEMPORARY SEDIMENT BASINS MAY BE INSTALLED AS GRADING OCCURS IN THE SPECIFIED AREA. MAINTAIN CONTROLS THROUGHOUT THE GRADING PROCESS INCLUDING REESTABLISHING ANY EXISTING CONTROL MEASURES DISTURBED BY CONSTRUCTION. PROVIDE ADDITIONAL SEDIMENT CONTROL, WHICH MAY NOT BE SHOWN ON THE DRAWINGS, CONSISTENT WITH THE MEANS, METHODS AND SEQUENCE OF CONSTRUCTION IN ACCORDANCE WITH PERMIT REQUIREMENTS AND AUTHORITIES HAVING JURISDICTION.

INSPECTION AND MAINTENANCE:

INSPECT THE ENTIRE CONSTRUCTION SITE AT LEAST ONCE EVERY SEVEN (7) DAYS DURING ACTIVE CONSTRUCTION AND WITHIN 24 HOURS AFTER A RAINFALL EVENT GREATER THAN 0.5 INCHES IN 24 HOURS. FOLLOWING AN INSPECTION THAT OCCURS WITHIN 24 HOURS AFTER A RAINFALL EVENT, THE NEXT INSPECTION MUST BE CONDUCTED WITHIN SEVEN (7) DAYS AFTER THE RAINFALL EVENT.

RECORD INSPECTION AND MAINTENANCE IN A LOG KEPT ON-SITE IN ACCORDANCE WITH THE PERMIT REQUIREMENTS.

INSPECTIONS MUST BE RECORDED WITHIN 24 HOURS IN WRITING AND BE RETAINED WITH THE SWPPP. RECORDS OF EACH INSPECTION AND MAINTENANCE ACTIVITY SHALL INCLUDE:

- 1.1. THE DATE, TIME AND EXACT LOCATION OF THE INSPECTION.
- 1.2. THE NAME OF THE INDIVIDUAL WHO PERFORMED THE INSPECTION.
- 1.3. AN ASSESSMENT OF THE CONDITION OF EROSION AND SEDIMENT CONTROLS.
- 1.4. A DESCRIPTION OF ANY EROSION AND SEDIMENT CONTROL INSTALLATION OR MAINTENANCE PERFORMED IN RESPONSE TO THE INSPECTION.
- 1.5. A DESCRIPTION OF THE PRESENT PHASE OF CONSTRUCTION AT THE SITE AND ANY SCHEDULE MODIFICATIONS THAT MAY INCREASE SEDIMENT DISCHARGE
- 1.6. IF AT ANY TIME A BMP NEEDS ROUTINE MAINTENANCE, THE PERMITTEE SHALL INITIATE THE NEEDED MAINTENANCE WORK SO THAT IT IS COMPLETED BY THE CLOSE OF THE NEXT BUSINESS DAY. THE PERMITTEE SHALL REPAIR OR REPLACE STORM WATER BMPS AS NECESSARY WITHIN 24 HOURS OF AN INSPECTION PERFORMED IN ACCORDANCE WITH SECTION 4.5 OF THIS PERMIT OR AFTER NOTIFICATION BY THE DEPARTMENT THAT REPAIR OR REPLACEMENT IS NEEDED.

WHERE PARTS OF THE PROJECT SITE HAVE PERMANENT COVER, BUT WORK REMAINS ON OTHER PARTS OF THE SITE, INSPECTIONS OF THESE AREAS MAY BE REDUCED TO ONCE PER MONTH.

INSPECTIONS SHALL CONTINUE THROUGHOUT THE WINTER MONTHS.

PROVIDE TEMPORARY STABILIZATION AS REQUIRED THROUGHOUT CONSTRUCTION FOR DISTURBED AREAS WHERE ACTIVE CONSTRUCTION IS NOT ONGOING TO MEET PERMIT STABILIZATION SCHEDULE.

INSPECT ALL INFILTRATION AREAS TO ENSURE THAT NO SEDIMENT FROM ONGOING CONSTRUCTION ACTIVITY IS REACHING THE INFILTRATION AREA AND EQUIPMENT IS NOT BEING DRIVEN ACROSS THE INFILTRATION AREA.

ADDITIONAL CONTROL MEASURES NOT SHOWN ON THE PLAN SHALL BE REQUIRED UNDER THE FOLLOWING CIRCUMSTANCES:

1. IF TEMPORARY SOIL STOCKPILES WILL BE BUILT, PERIMETER SILT FENCE WILL BE REQUIRED.
2. IF THE CITY OF OTHER AUTHORITY HAVING JURISDICTION REQUIRES ADDITIONAL EROSION CONTROL MEASURES, THE CONTRACTOR SHALL PROVIDE THEM.
3. AS THE CONTRACTOR PROCEEDS WITH THE WORK, HE SHALL BE RESPONSIBLE FOR PROVIDING ADDITIONAL EROSION CONTROL MEASURES WHICH MAY BE NECESSARY IN ACCORDANCE WITH THE FINAL MEANS, METHODS AND SEQUENCE OF CONSTRUCTION.
4. WHENEVER SWPPP AMENDMENTS ARE NECESSARY PER SECTION III.B. OF THE PERMIT.

THE CONTRACTOR SHALL MAINTAIN ALL TEMPORARY MEASURES DURING CONSTRUCTION, AND ENSURE PROPER FUNCTION OF THE PERMANENT MEASURES AT THE TIME OF PROJECT CLOSEOUT. AT A MINIMUM, THIS WORK SHALL INCLUDE THE FOLLOWING:

ALL NONFUNCTIONAL BMPS MUST BE REPAIRED, REPLACED OR SUPPLEMENTED WITH FUNCTIONAL BMPS BY THE END OF THE NEXT BUSINESS DAY AFTER DISCOVERY, OR AS SOON AS FIELD CONDITIONS ALLOW ACCESS UNLESS A DIFFERENT TIMEFRAME IS SPECIFIED BELOW. COMPLY WITH THE FOLLOWING INSPECTION AND MAINTENANCE REQUIREMENTS:

1. ALL PERIMETER CONTROL (I.E. SILT FENCE, BIOROLL, ETC.) MUST BE REPAIRED, REPLACED OR SUPPLEMENTED WHEN THEY BECOME NONFUNCTIONAL OR THE SEDIMENT REACHES ONE-HALF (1/2) OF THE HEIGHT OF THE DEVICE.
2. TEMPORARY AND PERMANENT SEDIMENTATION BASINS MUST BE DRAINED AND THE SEDIMENT REMOVED WHEN THE DEPTH OF SEDIMENT REACHES ONE-HALF (1/2) THE STORAGE VOLUME. DRAINAGE AND REMOVAL MUST BE COMPLETED WITHIN 72 HOURS OF DISCOVERY OR AS SOON AS FIELD CONDITIONS ALLOW.
3. SURFACE WATERS, INCLUDING DRAINAGE DITCHES AND CONVEYANCE SYSTEMS, MUST HAVE ALL DELTAS AND SEDIMENT DEPOSITS REMOVED AND ANY EXPOSED SOILS AS A RESULT OF SEDIMENT REMOVAL RESTABILIZED. THE REMOVAL AND STABILIZATION MUST TAKE PLACE WITHIN SEVEN (7) CALENDAR DAYS OF DISCOVERY UNLESS PRECLUDED BY LEGAL, REGULATORY, OR PHYSICAL ACCESS CONSTRAINTS. USE ALL REASONABLE EFFORTS TO OBTAIN ACCESS. IF PRECLUDED, REMOVAL AND STABILIZATION MUST TAKE PLACE WITHIN SEVEN (7) CALENDAR DAYS OF OBTAINING ACCESS. CONTRACTOR IS RESPONSIBLE FOR CONTACTING ALL AUTHORITIES HAVING JURISDICTION AND RECEIVING ANY APPLICABLE PERMITS PRIOR TO CONDUCTING ANY WORK IN SURFACE WATERS.
4. SEDIMENT AND SOILS TRACKED ONTO PAVED AREAS BOTH ON AND OFF SITE SHALL BE REMOVED DAILY BY THE END OF THE WORK DAY.
5. THE ROCK CONSTRUCTION ENTRANCE SHALL BE INSPECTED, AND IF THE ROCK IS CLOGGED, THE ROCK AND SEDIMENT SHALL BE REMOVED AND REPLACED WITH CLEAN ROCK.
6. STREETS AND OTHER ADJACENT AREAS TO THE PROJECT MUST BE INSPECTED AND HAVE SEDIMENT REMOVED FROM ALL PAVED SURFACES DAILY.
7. MAINTAIN PERMANENTLY STABILIZED AREAS UNTIL FULLY ESTABLISHED.
8. CLEAN STORM SEWER SYSTEM AT PROJECT COMPLETION. THIS SHALL INCLUDE REMOVING SEDIMENT, DEBRIS AND CONTAMINANTS FROM PERMANENT BMPS AND REMOVING SEDIMENT FROM ALL CATCH BASINS AND PIPES ON SITE. IF SEDIMENT HAS REACHED THE STORM SEWER TO WHICH THE SITE DISCHARGES, THAT SEDIMENT SHALL BE REMOVED AS WELL.
9. TEMPORARY MEASURES SHALL BE REMOVED AND DISPOSED OF FOLLOWING FINAL SITE STABILIZATION.

FINAL STABILIZATION:

THE CONTRACTOR MUST ENSURE FINAL STABILIZATION OF THE SITE AND SUBMIT A NOTICE OF TERMINATION (NOT) WITHIN 45 DAYS OF ACHIEVING FINAL STABILIZATION. FINAL STABILIZATION IS COMPLETE WHEN;

1. ALL SOIL DISTURBING ACTIVITIES ARE COMPLETE AND ALL SOILS ARE STABILIZED BY A UNIFORM PERENNIAL VEGETATIVE COVER WITH A MINIMUM DENSITY OF 70% ON ALL PERVIOUS AREAS.
2. THE PERMANENT STORMWATER MANAGEMENT SYSTEM IS CONSTRUCTED, CLEANED OF ANY ACCUMULATED SEDIMENT AND OPERATING AS DESIGNED AND ALL SEDIMENT HAS BEEN REMOVED FROM CONVEYANCE SYSTEMS AND DITCHES ARE STABILIZED WITH PERMANENT COVER.
3. ALL TEMPORARY BMPS HAVE BEEN REMOVED UNLESS THEY ARE DESIGNED TO DECOMPOSE.
4. FOR FINAL STABILIZATION AFTER CONSTRUCTION IS COMPLETED, AREAS WHERE THE PERMITTEE WILL PERFORM FINAL STABILIZATION THROUGH THE ESTABLISHMENT OF A PERENNIAL VEGETATIVE COVER SHALL FOLLOW THE PROCEDURES FOR PERMANENT SEEDING IN ACCORDANCE WITH THE DEPARTMENT'S SEEDING TECHNICAL STANDARD 1059 OR EQUIVALENT METHODOLOGY.

POLLUTION PREVENTION:

EXPECTED SOURCES OF POTENTIAL STORM WATER POLLUTANTS ON THE SITE OTHER THAN SOIL INCLUDE, BUT ARE NOT LIMITED TO, THOSE LISTED BELOW. THE CONTRACTOR SHALL IMPLEMENT THE FOLLOWING POLLUTION PREVENTION MANAGEMENT MEASURES ON THE SITE;

1. STORAGE, HANDLING AND DISPOSAL OF CONSTRUCTION PRODUCTS, MATERIALS AND WASTES SHALL COMPLY WITH THE FOLLOWING TO MINIMIZE THE EXPOSURE TO STORMWATER:
2. BUILDING PRODUCTS THAT HAVE THE POTENTIAL TO LEACH POLLUTANTS MUST BE UNDER COVER (I.E.) PLASTIC SHEETING OR TEMPORARY ROOFS) TO PREVENT THE DISCHARGE OF POLLUTANTS OR PROTECTED BY A SIMILARLY EFFECTIVE MEANS DESIGNED TO MINIMIZE CONTACT WITH STORMWATER RUNOFF.
3. PESTICIDES, HERBICIDES, INSECTICIDES, FERTILIZERS, TREATMENT CHEMICALS AND LANDSCAPE MATERIALS MUST BE UNDER COVER TO PREVENT THE DISCHARGE OF POLLUTANTS OR PROTECTED BY A SIMILARLY EFFECTIVE MEANS DESIGNED TO MINIMIZE CONTACT WITH STORMWATER RUNOFF.
4. HAZARDOUS MATERIALS, TOXIC WASTE (INCLUDING OIL, DIESEL FUEL, GASOLINE, HYDRAULIC FLUIDS, PAINT SOLVENTS, PETROLEUM-BASED PRODUCTS, WOOD PRESERVATIVES, ADDITIVES, CURING COMPOUNDS, AND ACIDS) MUST BE PROPERLY STORED IN SEALED AND LABELED CONTAINERS TO PREVENT SPILLS, LEAKS OR OTHER DISCHARGE. RESTRICTED ACCESS STORAGE MUST BE PROVIDED TO PREVENT VANDALISM. STORAGE AND DISPOSAL OF HAZARDOUS WASTE OR HAZARDOUS MATERIALS MUST BE IN COMPLIANCE WITH LOCAL, STATE, AND FEDERAL REGULATIONS INCLUDING SECONDARY CONTAINMENT AS APPLICABLE.
5. SOLID WASTE MUST BE STORED, COLLECTED AND DISPOSED OF PROPERLY IN COMPLIANCE WITH LOCAL, STATE, AND FEDERAL REGULATIONS.
6. PORTABLE TOILETS MUST BE POSITIONED SO THAT THEY ARE SECURE AND WILL NOT BE TIPPED OR KNOCKED OVER. SANITARY WASTE MUST BE DISPOSED OF PROPERLY IN ACCORDANCE LOCAL, STATE, AND FEDERAL REGULATIONS.
7. FUELING AND MAINTENANCE OF EQUIPMENT AND VEHICLES:; SPILL PREVENTION AND RESPONSE: TAKE REASONABLE STEPS TO PREVENT THE DISCHARGE OF SPILLED OR LEAKED CHEMICALS, INCLUDING FUEL, FROM ANY AREA WHERE CHEMICALS OR FUEL LOADING OR UNLADING INCLUDING THE USE OF DRIP PANS OR ABSORBENTS. CONDUCT FUELING IN A CONTAINED AREA AND ENSURE ADEQUATE SUPPLIES ARE AVAILABLE AT ALL TIMES TO CLEAN UP DISCHARGED MATERIALS AND THAT AN APPROPRIATE DISPOSAL METHOD IS AVAILABLE FOR RECOVERED SPILLED MATERIALS. REPORT AND CLEAN UP SPILLS IMMEDIATELY AND USE DRY CLEAN UP MEASURES WHERE POSSIBLE.
8. VEHICLE AND EQUIPMENT WASHING: WASHING MUST BE LIMITED TO A DEFINED AREA OF THE SITE WITH RUNOFF FROM THE WASHING AREA CONTAINED IN A SEDIMENT BASIN OR OTHER SIMILARLY EFFECTIVE CONTROL AND WASTE PROPERLY DISPOSED OF.
9. CONCRETE AND OTHER WASHOUTS WASTE: PROVIDE EFFECTIVE CONTAINMENT FOR ALL LIQUID AND SOLID WASTES GENERATED BY WASHOUT OPERATIONS (CONCRETE, STUCCO, PAINT, FORM RELEASE OILS, CURING COMPOUNDS, AND OTHER CONSTRUCTION MATERIALS). LIQUID AND SOLID WASHOUT WASTES MUST NOT CONTACT THE GROUND, AND THE CONTAINMENT MUST BE DESIGNED SO THAT IT DOES NOT RESULT IN RUNOFF FROM THE WASHOUT OPERATIONS OR AREAS. LIQUID AND SOLID WASTES MUST BE DISPOSED OF PROPERLY, IN A LEGAL MANNER AND IN COMPLIANCE WITH THE PERMIT. A SIGN MUST BE INSTALLED ADJACENT TO EACH WASHOUT FACILITY THAT REQUIRES SITE PERSONNEL TO UTILIZE THE PROPER FACILITIES FOR DISPOSAL OF CONCRETE AND OTHER WASHOUT WASTES.
10. THE CONTRACTOR IS RESPONSIBLE FOR MONITORING AIR POLLUTION AND ENSURING IT DOES NOT EXCEED LEVELS SET BY LOCAL, STATE OR FEDERAL REGULATIONS. THIS INCLUDES DUST CREATED BY WORK BEING PERFORMED ON THE SITE.

AMI Consulting Engineers P.A.
3640 TALMAGE CIR. VADNAIS HEIGHTS
651.344.8783 - amiengineers.com
SUPERIOR - IRON RANGE

I HEREBY CERTIFY THAT THIS PLAN, SPECIFICATION, OR REPORT WAS PREPARED BY ME OR UNDER MY DIRECT SUPERVISION AND THAT I AM A DULY LICENSED PROFESSIONAL ENGINEER UNDER THE LAWS OF THE STATE OF MINNESOTA.

NAME: XXXXX

SIGNATURE:

DATE:

LIC. No: XXXXX

PRELIMINARY NOT FOR CONSTRUCTION

DATE:	REV:	DESCRIPTION	REV. BY:
3/21/2021	A	60% SITE PLAN	MHO
5/14/2021	B	ISSUED TO OWNER FOR REVIEW	MHO

ASHLAND ALVAREZ DEVELOPMENT
2200 LAKE SHORE DRIVE EAST
ASHLAND, WI 54806

SWPPP NOTES

JOB No: 211012
DATE: XX/XX/XXXX
DRAWN BY: MTL
DESIGNED BY: BPK

SHEET: C6.1

12/19/2018 11:37 AM Z:\2021\211012_CSDesignEngineering_Alvarez Development\Civil_Survey\3_CAD and Point Files\e. Plansheets\211012 - C6.0 - SWPPP.dwg

© COPYRIGHT ~ AMI CONSULTING ENGINEERS P.A. : 2006

RECORD RETENTION:

THE SWPPP, INCLUDING, ALL CHANGES TO IT, PERMITS, AND INSPECTION AND MAINTENANCE RECORDS MUST BE KEPT AT THE SITE DURING CONSTRUCTION. THE SWPPP CAN BE KEPT IN EITHER THE FIELD OFFICE OR IN AN ON-SITE VEHICLE DURING NORMAL WORKING HOURS. THE OWNER MUST KEEP THE FOLLOWING RECORDS ON FILE FOR THREE (3) YEARS AFTER SUBMITTAL OF THE NOT:

1. THE FINAL SWPPP.
2. ANY OTHER STORMWATER RELATED PERMITS REQUIRED FOR THE PROJECT.
3. RECORDS OF ALL INSPECTION AND MAINTENANCE CONDUCTED DURING CONSTRUCTION.
4. ALL PERMANENT OPERATION AND MAINTENANCE AGREEMENTS THAT HAVE BEEN IMPLEMENTED, INCLUDING ALL RIGHT-OF-WAY, CONTRACTS, COVENANTS AND OTHER BINDING REQUIREMENTS REGARDING PERPETUAL MAINTENANCE.
5. ALL REQUIRED CALCULATIONS FOR DESIGN OF THE TEMPORARY AND PERMANENT STORMWATER MANAGEMENT SYSTEMS.

SWPPP AMENDMENTS:

THE PERMITTEE MUST AMEND THE SWPPP AS NECESSARY TO INCLUDE ADDITIONAL REQUIREMENTS THAT ARE DESIGNED TO CORRECT PROBLEMS IDENTIFIED OR TO ADDRESS ANY OF THE FOLLOWING SITUATIONS:

1. THERE IS A CHANGE IN DESIGN, CONSTRUCTION, OPERATION, MAINTENANCE, WEATHER OR SEASONAL CONDITIONS THAT HAVE A SIGNIFICANT EFFECT ON THE STORMWATER DISCHARGE.
2. INSPECTION OR INVESTIGATION BY A PARTY (SWPPP COORDINATOR, INSPECTORS, SITE OPERATOR, LOCAL, STATE OR FEDERAL OFFICIALS) INDICATES THE SWPPP IS NOT EFFECTIVE.
3. THE SWPPP IS NOT ACHIEVING THE GENERAL OBJECTIVES OF MINIMIZING POLLUTANTS IN STORMWATER DISCHARGES OR THE SWPPP IS DEEMED TO BE NOT CONSISTENT WITH THE TERMS AND CONDITIONS OF THE PERMIT.

ESTIMATED QUANTITIES

BMP	UNIT	QUANTITY
SILT FENCE	LF	1915
BIOROLL	LF	418
STORM DRAIN INLET PROTECTION	EA	13
ROCK CONSTRUCTION ENTRANCE	EA	1
SEED/MULCH	AC	2
EROSION CONTROL BLANKET	SY	987

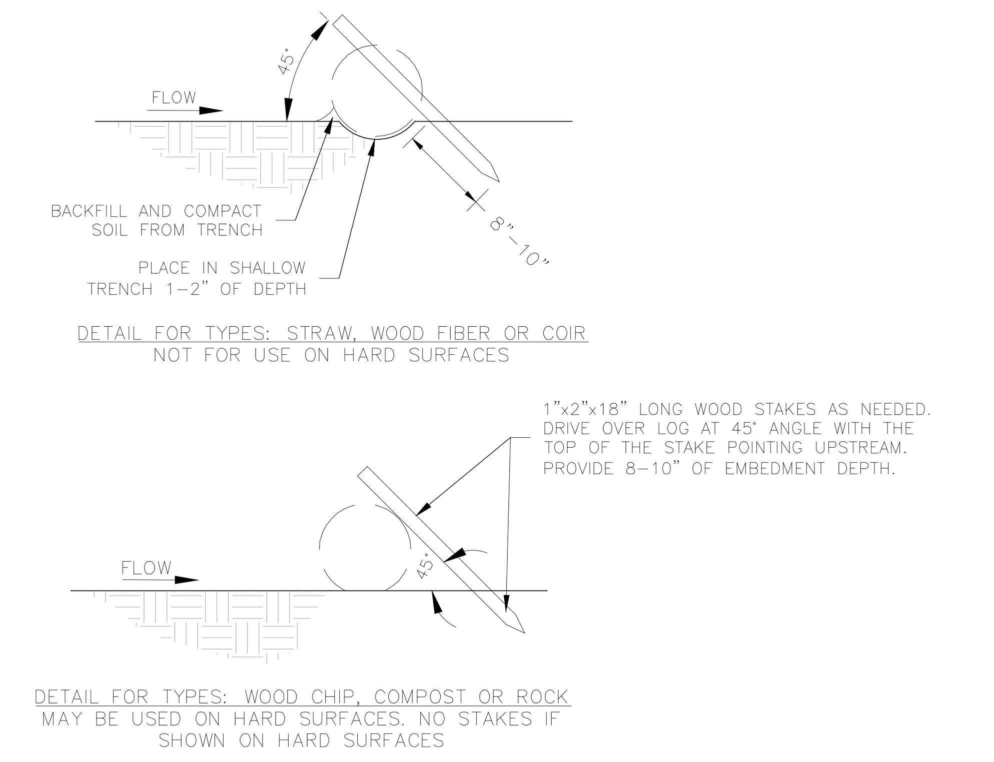

NOTES:

1. SPACE BETWEEN STAKES SHALL BE A MAXIMUM OF 1 FOOT FOR DITCH CHECKS OR 2 FEET FOR OTHER APPLICATIONS.
2. PLACE STAKES AS NEEDED TO PREVENT MOVEMENT OF SEDIMENT CONTROL LOGS PLACED ON SLOPES OR AS NEEDED DUE TO OTHER FACTORS. STAKES SHALL BE INCIDENTAL.

1 / C6.2 BIOROLL LOG
NOT TO SCALE, SEE C6.0

USGS MAP
NOT TO SCALE

SDD 8e14 Tracking Pad

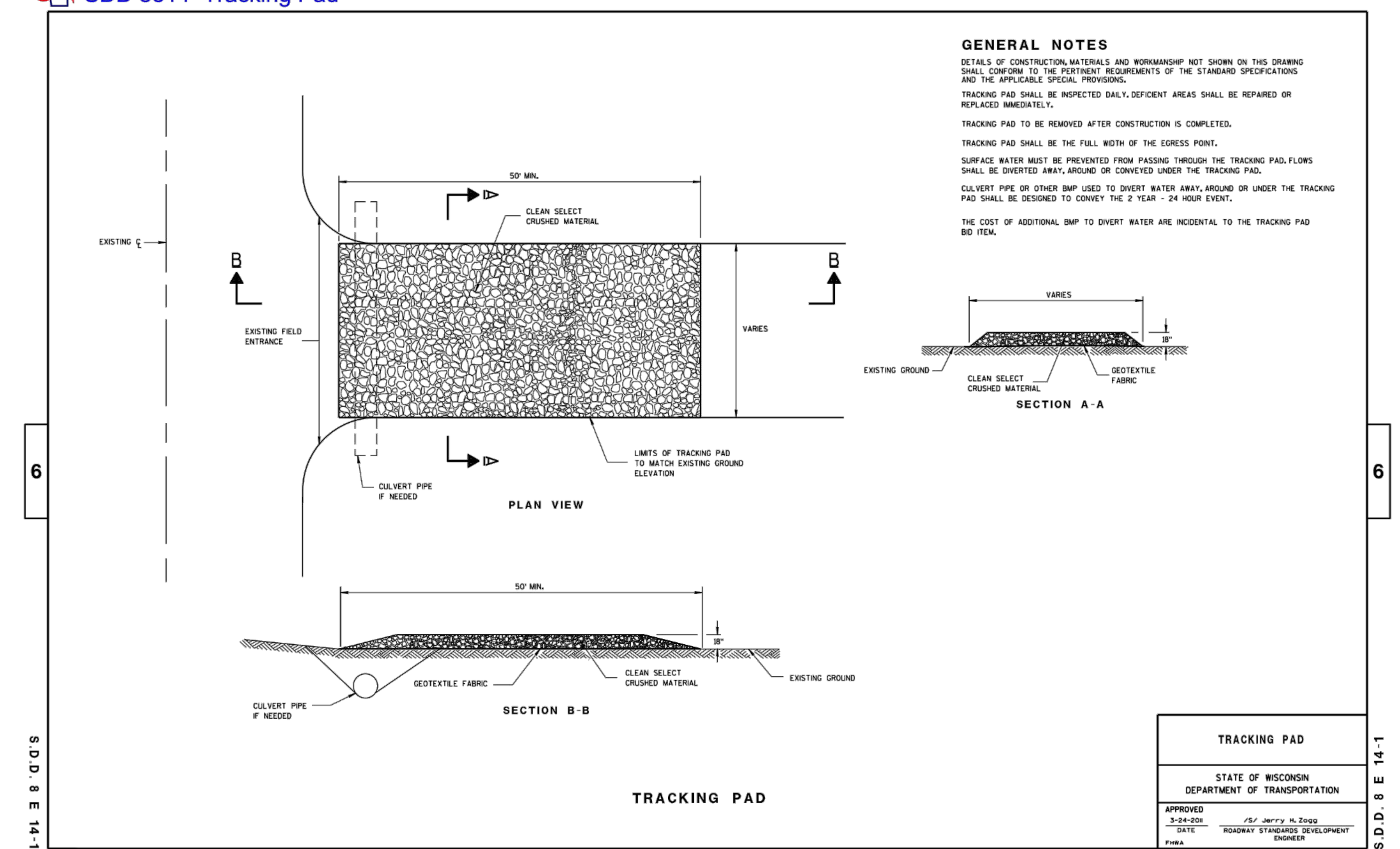

SDD 8e9 Silt Fence

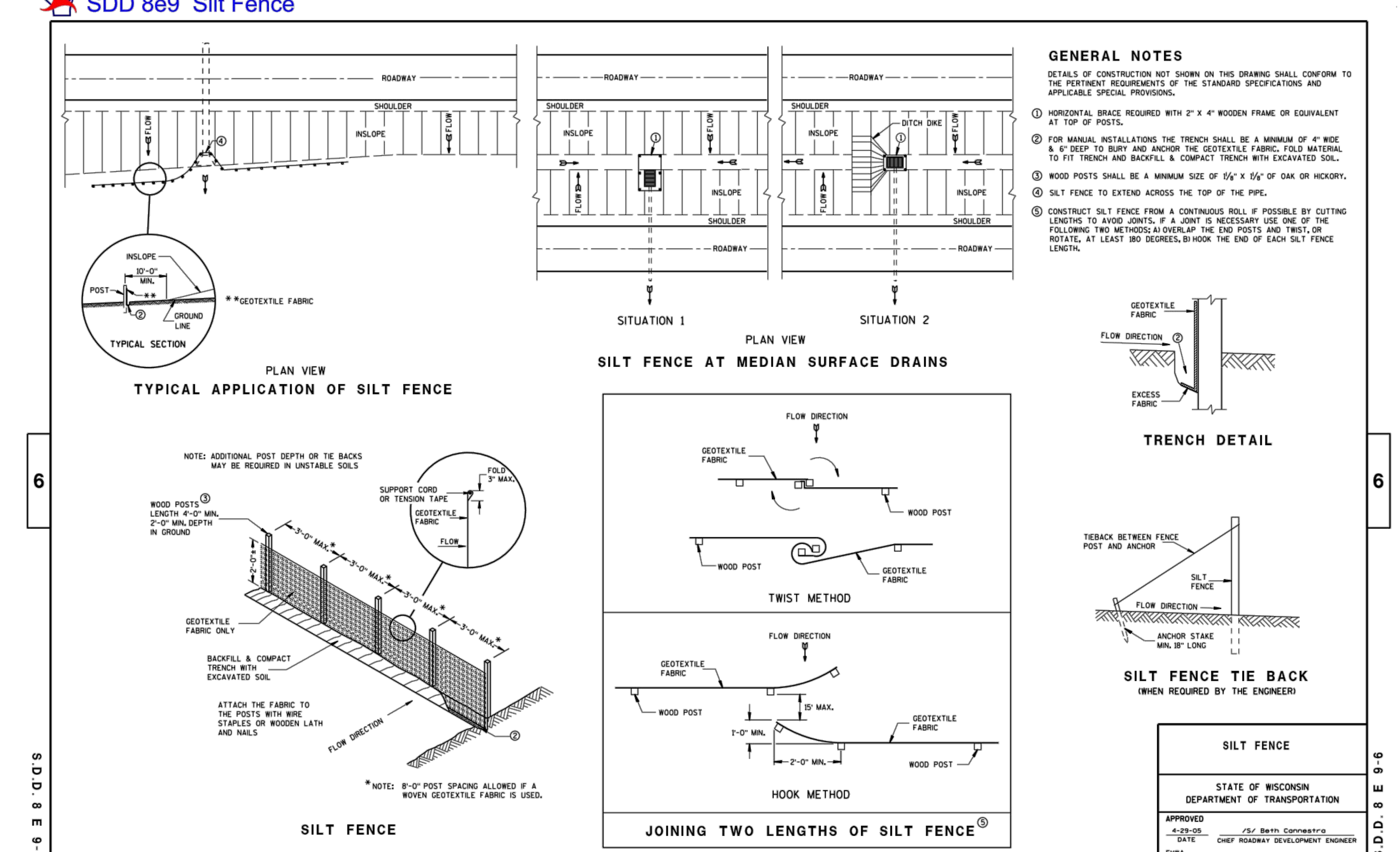

SDD 8e10 Inlet Protection Type A, B, C and D

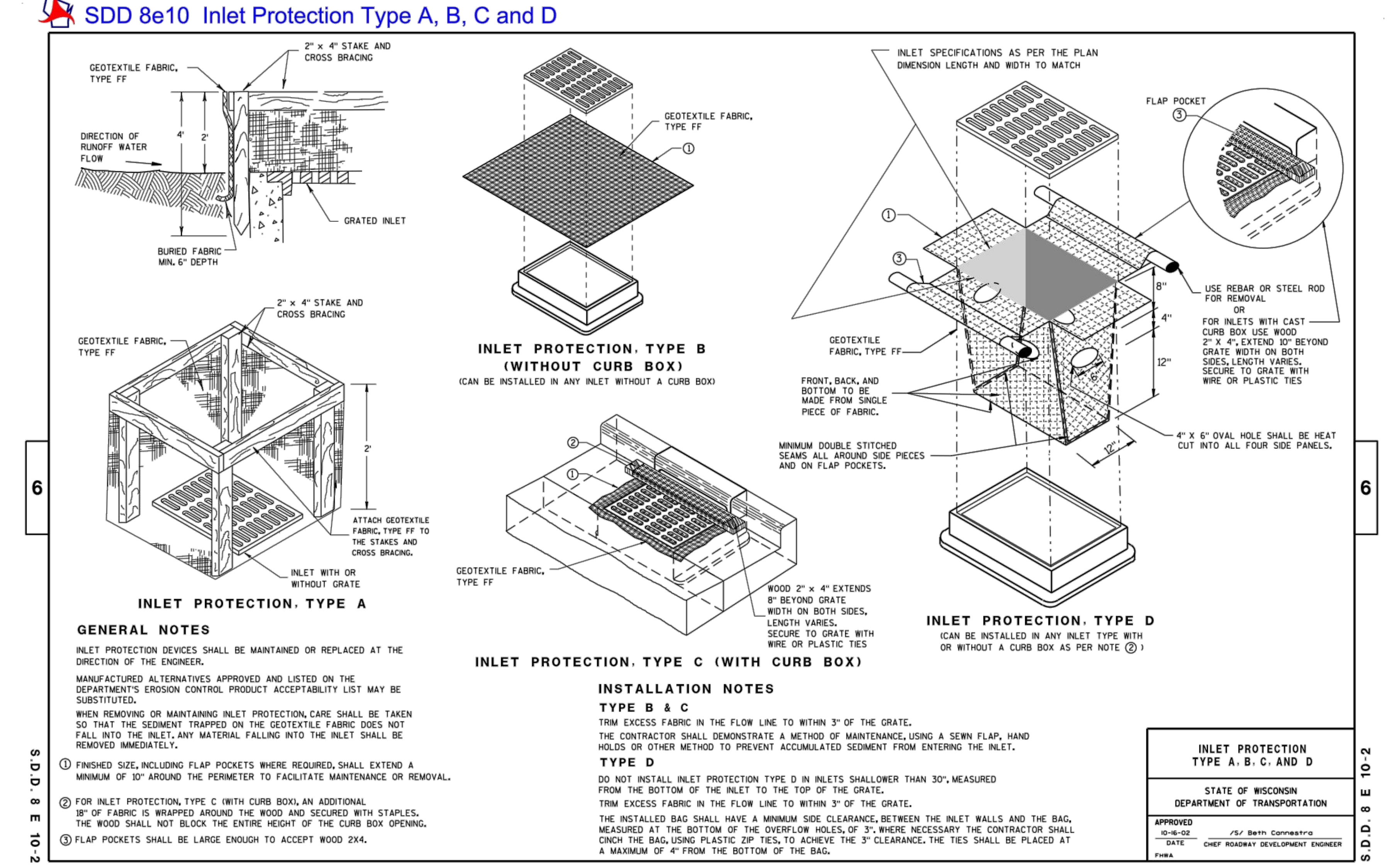

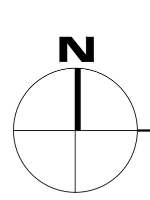

Consulting Engineers P.A.
3640 TALMAGE CIR. VADNAIS HEIGHTS
651.344.8783 - amiengineers.com
SUPERIOR - IRON RANGE

I HEREBY CERTIFY THAT THIS PLAN, SPECIFICATION, OR REPORT WAS PREPARED BY ME OR UNDER MY DIRECT SUPERVISION AND THAT I AM A DULY LICENSED PROFESSIONAL ENGINEER UNDER THE LAWS OF THE STATE OF MINNESOTA.

PRELIMINARY NOT FOR CONSTRUCTION

NAME: XXXX
SIGNATURE:
DATE:
LIC. NO: XXXXX

DATE:	REV:	DESCRIPTION	REV. BY:
3/21/2021	A	60% SITE PLAN	MHO
5/14/2021	B	ISSUED TO OWNER FOR REVIEW	MHO

ASHLAND ALVAREZ DEVELOPMENT
2200 LAKE SHORE DRIVE EAST
ASHLAND, WI 54806

SWPPP DETAILS

JOB No: 211012
DATE: XX/XX/XXXX
DRAWN BY: MTL
DESIGNED BY: BPK

SHEET: C6.2